MECLUBE
MADE IN ITALY

www.meclube.com

ELECTRIC PUMPS FOR FLUIDS

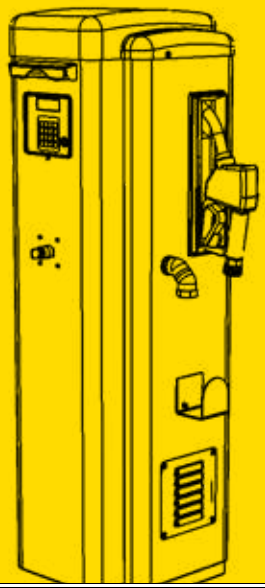

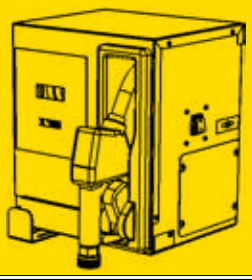

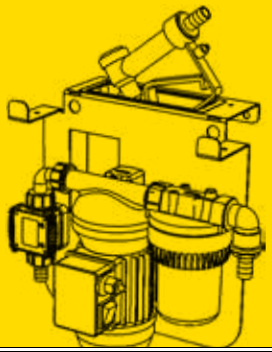

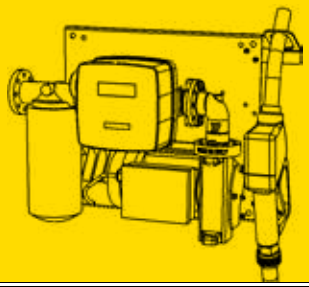

MADE IN ITALY

Catalogue 01/2022

Fully Italian production

MECLUBE gives to all its customers the availability of a global service, assured by a wide range of products. The excellent relation between quality/price and the respect of the delivery time make our company an ideal partner. Thanks to the high flexibility of our modalities of production we are able to establish an exceptional relation with our customers that comes true in the customization, in the colour, in the brand of the company on the standard range of our products. Our purchase cycle becomes complete with a speedy and qualified assistence service.

Service

Our company is able to offer to all our customers items of high quality and availability. It has a modern and innovative equipment of project, a lot of machines with a huge productive potential, a wide range of stamps, manufacturing cycles, tools, test and assemby machinery. Our customers represent the most important patrimony of MECLUBE. We are convinced that people make the difference, and we are at their disposal to start a relationship of growth and innovation, always having in mind the only possible result: the best one.

PRODUCTS INDEX

"Battery Kit" ..... page. 2

"Barrel Kit" ..... page. 4

"Transfer Kit" ..... page. 8

"Barrel Kit" ..... page. 12

"Dispenser Kit" ..... page. 16

"Wall Mec" ..... page. 20

"Meclube Box" ..... page. 30

"Mec-Reel" distributor ..... page. 32

"Cami Dispenser" ..... page. 34

"Gaia Service" ..... page. 46

"MecGest Box" ..... page. 52

Diesel tank ..... page. 56

Diesel "Caddy" ..... page. 66

"Multitank" "Tank in Tank" ..... page. 68

"Mec-Filter"- "EcoFilter" ..... page. 70

Battery pumps for diesel 12-24V ..... page. 74

Electric pumps for diesel ..... page. 77

Electric pumps for oil and lubricants ..... page. 82

Mechanical/digital meters for diesel ..... page. 84

Accessories for MecGest ..... page. 88

Manual/automatic nozzles ..... page. 89

Water separating delivery filters ..... page. 93

Suction hose kits for diesel
Antistatic rubber hoses for diesel ..... page. 95

Automatic hose reels for diesel
valves filters fittings ..... page. 99

Jerry cans for fuel transfer ..... page. 103

Manual pumps for diesel ..... page. 104

"Benz Kit" ..... page. 106

"Benz-Tank" for gasoline ..... page. 112

Gasoline "Caddy" ..... page. 114

Electric pump for gasoline ..... page. 116

Mechanical/digital meters for gasoline
nozzles for gasoline transfer ..... page. 117

Kit for "AdBlue® IBC" ..... page. 120

"Barrel Kit AdBlue®" ..... page. 126

"Transfer Kit AdBlue®" ..... page. 130

"Meclube Box AdBlue®" ..... page. 134

"Electronic Cami Dispenser AdBlue®" ..... page. 136

"Electronic Gaia Service AdBlue®" ..... page. 140

AdBlue® Tank ..... page. 144

AdBlue® Tank-distributor "DEF-Tank" ..... page. 148

AdBlue® "Caddy" ..... page. 150

AdBlue® transfer kit "Giuly-Blu" ..... page. 152

Trolleys for drums 180-220L ..... page. 156

Electric diaphragm pumps for AdBlue® ..... page. 158

Submersible AdBlue® Electro-pump "Mec-Ariel" ..... page. 160

Air-operated double diaphragm pumps ..... page. 162

Manual/automatic nozzles for AdBlue® ..... page. 164

Digital meters and filters for AdBlue® ..... page. 166

Fittings and connections for AdBlue®
Suction hoses kit for AdBlue® page.168

Manual pumps for AdBlue® transfer ..... page. 170

Automatic hose reels for AdBlue® page.172

Digital flow meter for food
Manual nozzles for food ..... page. 176

Stainless steel manual pump
Trolley for 20-30l drums ..... page. 177

ELECTRIC PUMPS KIT FOR DIESEL TRANSFER “Battery Kit”

Portable diesel transferring kit with 12V or 24V DC electric pump. It is useful when the distribution or the diesel fuel transfer are needed, but only the electric power supply of a battery is available.

“Battery Kit” series composed by:

Art. 091-5080-045 12V Pump - power cable (sec. 2,5 mmq, 2 m lenght) with pincers and fuse - 45 l/min

Art. 091-5082-045 24V Pump - power cable (sec. 2,5 mmq, 2 m lenght) with pincers and fuse - 45 l/min

Art. 091-5081-060 12V Pump - power cable (sec. 4 mmq, 4 m lenght) with pincers and fuse - 60 l/min

Art. 091-5083-060 24V Pump- power cable (sec. 4 mmq, 4 m lenght) with pincers and fuse - 60 l/min

Art. 091-5081-085 Pump 12 V - power cable (sec. 6 mmq, 4 m lenght) with pincers and fuse - 85 l/min

Art. 091-5083-085 24 V Pump - power cable (sec. 6 mmq, 4 m lenght) with pincers and fuse - 85 l/min

Art. 908-0516-040 Connection hose ø 20 mm M-M 1” 4 m lenght

Art. 095-5430-020 Suction hose kit ø 25 mm, 2 m lenght

Art. 093-5200-000 Manual nozzle MC80 Flow rate 80 l/min

Art. 093-5210-000 Automatic nozzle PA60 Flow rate 70 l/min

Art. 093-5215-000 Automatic nozzle PA90 Flow rate 90 l/min

ELECTRIC PUMPS KIT FOR DIESEL TRANSFER “Battery Kit”

Ref.	Descrip.	Flow rate	Voltage	Power	Inlet-Outlet	Conn. Hose	Nozzle	Duty cycle	Wei-ght	Packaging
		l/min	AC V./Hz DC Volt	W	BSPG	Ø		min	Kg	mm
090-5025-045	Battery kit	**45**	12	264	F1” - F1”	20	Manual	40	8.80	410X400X270
090-5025-060	Battery kit	**60**	12	336	F1" - F1"	20	Manual	40	10,15	410X400X270
090-5025-085	Battery kit	**85**	12	432	F1" - F1"	20	Manual	S2 30	13,10	410X400X270
090-5026-045	Battery kit	**45**	24	312	F1" - F1"	20	Manual	40	8,80	410X400X270
090-5026-060	Battery kit	**60**	24	432	F1" - F1"	20	Manual	40	10,15	410X400X270
090-5026-085	Battery kit	**85**	24	432	F1" - F1"	20	Manual	S2 30	13,10	410X400X270
090-5027-045	Battery kit	**45**	12	264	F1" - F1"	20	Aut.PA60	40	8,80	410X400X270
090-5027-060	Battery kit	**60**	12	336	F1" - F1"	20	Aut.PA60	40	10,15	410X400X270
090-5027-085	Battery kit	**85**	12	432	F1" - F1"	20	Aut.PA90	S2 30	13,50	410X400X270
090-5028-045	Battery kit	**45**	24	312	F1" - F1"	20	Aut.PA60	40	8,80	410X400X270
090-5028-060	Battery kit	**60**	24	432	F1" - F1"	20	Aut.PA60	40	10,15	410X400X270
090-5028-085	Battery kit	**85**	24	432	F1" - F1"	20	Aut.PA90	S2 30	13,50	410X400X270

ELECTRIC PUMPS KIT FOR DIESEL TRANSFER “Barrel Kit”

Portable diesel transferring kit with 12V or 24V DC electric pump. It is useful when the distribution or the diesel fuel transfer are needed, but only the electric power supply of a battery is available.

“Barrel Kit” series composed by:

Art. 091-5080-045 12V Pump- power cable (sec. 2,5 mmq, 2 m lenght) with pincers and fuse - 45 l/min
Art. 091-5082-045 24V Pump- power cable (sec. 2,5 mmq, 2 m lenght) with pincers and fuse - 45 l/min

Art. 091-5081-060 12V Pump- power cable (sec. 4 mmq, 4 m lenght) with pincers and fuse - 60 l/min
Art. 091-5083-060 24V Pump- power cable (sec. 4 mmq, 4 m lenght) with pincers and fuse - 60 l/min

Art. 091-5081-085 12 V Pump- power cable (sec. 6 mmq, 4 m lenght) with pincers and fuse - 85 l/min
Art. 091-5083-085 24 V Pump- power cable (sec. 6 mmq, 4 m lenght) with pincers and fuse - 85 l/min

Art. 908-0516-040 Connection hose ø 20 mm M-M 1” 4 m lenght

Art. 095-5284-000 Telescopic suction hose with foot valve M 1” 495<885 mm lenght

Art. 095-5280-609 M 1”- M 2” quick coupling

Art. 093-5200-000 Manual nozzle MC80 Flow rate 80 l/min

Art. 093-5210-000 Automatic nozzle PA60 Flow rate 70 l/min
Art. 093-5215-000 Automatic nozzle PA90 Flow rate 90 l/min

Art. 093-5300-000 Nozzle support bracket

ELECTRIC PUMPS KIT FOR DIESEL TRANSFER “Barrel Kit”

Ref.	Descrip.	Flow rate	Voltage	Power	Inlet-Outlet	Conn. Hose	Nozzle	Duty cycle	Wei-ght	Packaging
		l/min	AC V./Hz DC Volt	W	BSPG	Ø		min	Kg	mm
090-5030-045	Barrel Kit	**45**	12	264	F1" - F1"	20	Manual	40	10,25	410X400X320
090-5030-060	Barrel Kit	**60**	12	336	F1" - F1"	20	Manual	40	11,70	410X400X320
090-5030-085	Barrel Kit	**85**	12	432	F1" - F1"	20	Manual	S2 30	14,50	410X400X320
090-5032-045	Barrel Kit	**45**	24	312	F1" - F1"	20	Manual	40	10,25	410X400X320
090-5032-060	Barrel Kit	**60**	24	432	F1" - F1"	20	Manual	40	11,70	410X400X320
090-5032-085	Barrel Kit	**85**	24	432	F1" - F1"	20	Manual	S2 30	14,50	410X400X320
090-5035-045	Barrel Kit	**45**	12	264	F1" - F1"	20	Aut.PA60	40	10,85	410X400X320
090-5035-060	Barrel Kit	**60**	12	336	F1" - F1"	20	Aut.PA60	40	12,30	410X400X320
090-5035-085	Barrel Kit	**85**	12	432	F1" - F1"	20	Aut.PA90	S2 30	15,40	410X400X320
090-5036-045	Barrel Kit	**45**	24	312	F1" - F1"	20	Aut.PA60	40	10,85	410X400X320
090-5036-060	Barrel Kit	**60**	24	432	F1" - F1"	20	Aut.PA60	40	12,30	410X400X320
090-5036-085	Barrel Kit	**85**	24	432	F1" - F1"	20	Aut.PA90	S2 30	15,40	410X400X320

ELECTRIC PUMPS KIT FOR DIESEL TRANSFER “Barrel Kit”

Portable diesel transferring kit with 12V or 24V DC electric pump. It is useful when the distribution or the diesel fuel transfer are needed, but only the electric power supply of a battery is available.

“Barrel Kit” series composed by:

Art. 091-5080-045 12V Pump- power cable (sec. 2,5 mmq, 2 m lenght) with pincers and fuse - 45 l/min
Art. 091-5082-045 24V Pump- power cable (sec. 2,5 mmq, 2 m lenght) with pincers and fuse - 45 l/min

Art. 091-5081-060 12V Pump- power cable (sec. 4 mmq, 4 m lenght) with pincers and fuse - 60 l/min
Art. 091-5083-060 24V Pump- power cable (sec. 4 mmq, 4 m lenght) with pincers and fuse - 60 l/min

Art. 091-5081-085 12 V Pump- power cable (sec. 6 mmq, 4 m lenght) with pincers and fuse - 85 l/min
Art. 091-5083-085 24 V Pump- power cable (sec. 6 mmq, 4 m lenght) with pincers and fuse - 85 l/min

Art. 092-5103-000 Mechanical flow meter 3 digits F1” 120 l/min

Art. 908-0516-040 Connection hose ø 20 mm M-M 1” 4 m lenght

Art. 095-5284-000 Telescopic suction hose with foot valve M 1” 495<885 mm lenght

Art. 095-5280-609 M 1”- M 2” quick coupling

Art. 093-5200-000 Manual nozzle MC80 Flow rate 80 l/min

Art. 093-5210-000 Automatic nozzle PA60 Flow rate 70 l/min
Art. 093-5215-000 Automatic nozzle PA90 Flow rate 90 l/min

Art. 093-5300-000 Nozzle support bracket

ELECTRIC PUMPS KIT FOR DIESEL TRANSFER “Barrel Kit”

Ref.	Descrip.	Flow rate	Voltage	Power	Inlet-Outlet	Conn. hose	Nozzle	Flow meter	Duty cycle	Wei-ght	Packaging
		l/min	AC V./Hz DC Volt	W	BSPG	Ø			min	Kg	mm
090-5037-M45	Barrel Kit	**45**	12	264	F1"-F1"	20	Manual	YES	40	12,70	550X400X320
090-5037-M60	Barrel Kit	**60**	12	336	F1"-F1"	20	Manual	YES	40	14,10	550X400X320
090-5037-M85	Barrel Kit	**85**	12	432	F1"-F1"	20	Manual	YES	S2 30	16,90	550X400X320
090-5038-M45	Barrel Kit	**45**	24	312	F1"-F1"	20	Manual	YES	40	12,70	550X400X320
090-5038-M60	Barrel Kit	**60**	24	432	F1"-F1"	20	Manual	YES	40	14,10	550X400X320
090-5038-M85	Barrel Kit	**85**	24	432	F1"-F1"	20	Manual	YES	S2 30	16,90	550X400X320
090-5037-045	Barrel Kit	**45**	12	264	F1"-F1"	20	Aut.PA60	YES	40	13,30	550X400X320
090-5037-060	Barrel Kit	**60**	12	336	F1"-F1"	20	Aut.PA60	YES	40	14,70	550X400X320
090-5037-085	Barrel Kit	**85**	12	432	F1"-F1"	20	Aut.PA90	YES	S2 30	17,80	550X400X320
090-5038-045	Barrel Kit	**45**	24	312	F1"-F1"	20	Aut.PA60	YES	40	13,30	550X400X320
090-5038-060	Barrel Kit	**60**	24	432	F1"-F1"	20	Aut.PA60	YES	40	14,70	550X400X320
090-5038-085	Barrel Kit	**85**	24	432	F1"-F1"	20	Aut.PA90	YES	S2 30	17,80	550X400X320

ELECTRIC PUMPS KIT FOR DIESEL TRANSFER “Transfer Kit”

Transfer kit composed by electric vane pump 230V/115V, hose ø 20 4 m lenght, suction hose ø 25 2 m lenght complete with valve + filter, manual or automatic dispensing nozzle.

“Transfer Kit” series composed by:

Art. 091-5095-060 Electric pump 230V 50Hz 60 l/min

Art. 091-5098-070 Electric pump 230V 50Hz 70 l/min

Art. 091-5099-070 Electric pump 115V 60Hz 70 l/min

Art. 908-0516-040 Connection hose ø 20 mm M-M 1” 4 m lenght

Art. 095-5440-020 Suction hose ø 25 mm 2 m lenght

Art. 093-5202-000 Aluminium manual nozzle MC100 Flow rate 100 l/min

Art. 093-5210-000 Automatic nozzle PA60 Flow rate 70 l/min

ELECTRIC PUMPS KIT FOR DIESEL TRANSFER “Transfer Kit”

Ref.	Descrip.	Flow rate	Voltage	Power	Inlet-Outlet	Conn. Hose	Nozzle	Duty cycle	Wei-ght	Packaging
		l/min	AC V./Hz DC Volt	W	BSPG	Ø		min	Kg	mm
090-5260-060	Transfer Kit	**60**	230/50	460	F1"-F1"	20	Manual	Contin.	10,30	410X400X270
090-5260-070	Transfer Kit	**70**	230/50	552	F1"-F1"	20	Manual	Contin.	11,20	410X400X270
090-5260-07X	Transfer Kit	**70**	115/60	575	F1”-F1”	20	Manual	Contin.	11,20	410X400X270
090-5262-060	Transfer Kit	**60**	230/50	460	F1"-F1"	20	Aut.PA60	Contin.	11,00	410X400X270
090-5262-070	Transfer Kit	**70**	230/50	552	F1"-F1"	20	Aut.PA60	Contin.	12,20	410X400X270
090-5262-07X	Transfer Kit	**70**	115/60	575	F1"-F1"	20	Aut.PA60	Contin.	12,20	410X400X270

ELECTRIC PUMPS KIT FOR DIESEL TRANSFER “Transfer Kit”

Transfer kit composed by electric vane pump 230V / 115V, hose ø 25 4 m lenght, suction hose ø 25 2 m lenght complete with valve + filter, manual or automatic dispensing nozzle.

“Transfer Kit” series composed by:

Art. 091-5100-100 Electric Pump 230V 50Hz 100 l/min

Art. 091-5100-150 Electric Pump 230V 50Hz 150 l/min

Art. 091-5101-100 Electric pump 115V 60Hz 100 l/min

Art. 908-0616-040 Connection hose ø 25 mm M-M 1” 4 m lenght

Art. 095-5440-020 Suction hose kit ø 25 mm 2 m lenght

Art. 093-5202-000 Aluminium manual nozzle MC100 Flow rate 100 l/min

Art. 093-5220-000 Automatic nozzle PA120 Flow rate 120 l/min

ELECTRIC PUMPS KIT FOR DIESEL TRANSFER “Transfer Kit”

Ref.	Descrip.	Flow rate	Voltage	Power	Inlet-Outlet	Conn. hose	Nozzle	Duty cycle	Wei-ght	Packaging
		l/min	AC V.Hz DC Volt	W	BSPG	Ø		min	Kg	mm
090-5300-100	Transfer Kit	**100**	230/50	805	F1" - F1"	25	Manual	Contin.	18,50	410X400X270
090-5300-150	Transfer Kit	**150**	230/50	1725	F1" - F1"	25	Manual	S2 30	21,60	410X400X270
090-5300-10X	Transfer Kit	**100**	115/60	977	F1" - F1"	25	Manual	Contin.	18,50	410X400X270
090-5302-100	Transfer Kit	**100**	230/50	805	F1" - F1"	25	Aut.PA120	Contin.	19,50	410X400X270
090-5302-150	Transfer Kit	**150**	230/50	1725	F1" - F1"	25	Aut.PA120	S2 30	22,60	410X400X270
090-5302-10X	Transfer Kit	**100**	115/60	977	F1" - F1"	25	Aut.PA120	Contin.	19,50	410X400X270

ELECTRIC PUMPS KIT FOR DIESEL TRANSFER “Barrel Kit”

Kit for diesel transfer from drums and barrels through electric vane pump 230V / 115V.
The kit is composed by metalic telescopic hose for suction, 2’’ quick coupling for drum fixing, manual or automatic dispensing nozzle, with support bracket to facilitate the usage of the dispenser.

“Barrel Kit” series composed by:

Art. 091-5095-060 Electric pump 230V 50Hz 60 l/min

Art. 091-5098-070 Eletric pump 230V 50Hz 70 l/min

Art. 091-5099-070 Electric pump 115V 50Hz 70 l/min

Art. 908-0516-040 Connection hose ø 20 mm M-M 1” 4 m lenght

Art. 095-5284-000 Telescopic suction hose with foot valve
M 1” 495<885 mm lenght

Art. 095-5280-609 M 1”- M 2” quick coupling

Art. 093-5202-000 Aluminium manual nozzle MC100 Flow rate 100 l/min

Art. 093-5210-000 Automatic nozzle PA60 Flow rate 70 l/min

Art. 093-5300-000 Nozzle support bracket

ELECTRIC PUMPS KIT FOR DIESEL TRANSFER “Barrel Kit”

Ref.	Descrip.	Flow rate	Voltage	Power	Inlet-Outlet	Conn. hose	Nozzle	Duty Cycle	Wei-ght	Packaging
		l/min	AC V./Hz DC Volt	W	BSPG	Ø		min	Kg	mm
090-5039-M60	Barrel Kit	**60**	230/50	460	F1" - F1"	20	Man.	Contin.	12,80	410X400X320
090-5039-M70	Barrel Kit	**70**	230/50	552	F1" - F1"	20	Man.	Contin.	13,85	410X400X320
090-5039-M7X	Barrel Kit	**70**	115/60	575	F1" - F1"	20	Man.	Contin.	13,85	410X400X320
090-5039-060	Barrel Kit	**60**	230/50	460	F1" - F1"	20	Aut.PA60	Contin.	13,40	410X400X320
090-5039-070	Barrel Kit	**70**	230/50	552	F1" - F1"	20	Aut.PA60	Contin.	14,45	410X400X320
090-5039-07X	Barrel Kit	**70**	115/60	575	F1" - F1"	20	Aut.PA60	Contin.	14,45	410X400X320

ELECTRIC PUMPS KIT FOR DIESEL TRANSFER “Barrel Kit”

Kit for diesel transfer from drums and barrels through electric vane pump 230V / 115V. The kit is composed by metalic telescopic hose for suction, mechanical flow meter, 2’’ quick coupling for drum fixing, manual or automatic dispensing nozzle, with support bracket to facilitate the usage of the dispenser.

“Barrel Kit” series composed by:

Art. 091-5095-060 Electric pump 230V 50Hz 60 l/min

Art. 091-5098-070 Electric pump 230V 50Hz 70 l/min

Art. 091-5099-070 Electric pump 115V 50Hz 70 l/min

Art. 092-5103-000 Mechanical flow meter 3 digits F1” 120 l/min

Art. 908-0516-040 Connection hose ø 20 mm M-M 1” 4 m lenght

Art. 095-5284-000 Telescopic suction hose with foot valve
M 1” 495<885 mm lenght

Art. 095-5280-609 M 1”- M 2” quick coupling

Art. 093-5202-000 Aluminium manual nozzle MC100 Flow rate 100 l/min

Art. 093-5210-000 Automatic nozzle PA60 Flow rate 70 l/min

Art. 093-5300-000 Nozzle support bracket

ELECTRIC PUMPS KIT FOR DIESEL TRANSFER “Barrel Kit”

Ref.	Descrip.	Flow rate	Voltage	Power	Inlet-Outlet	Conn. hose	Nozzle	Flow meter	Duty cycle	Wei-ght	Packaging
		l/min	AC V./Hz DC Volt	W	BSPG	Ø			min	Kg	mm
090-5040-M60	Barrel Kit	**60**	230/50	460	F1" - F1"	20	Man.	YES	Contin.	15,00	550X400X320
090-5040-M70	Barrel Kit	**70**	230/50	552	F1" - F1"	20	Man.	YES	Contin.	15,90	550X400X320
090-5040-M7X	Barrel Kit	**70**	115/60	575	F1" - F1"	20	Man.	YES	Contin.	15,90	550X400X320
090-5040-060	Barrel Kit	**60**	230/50	460	F1" - F1"	20	Aut.PA60	YES	Contin.	15,60	550X400X320
090-5040-070	Barrel Kit	**70**	230/50	552	F1" - F1"	20	Aut.PA60	YES	Contin.	16,45	550X400X320
090-5040-07X	Barrel Kit	**70**	115/60	575	F1" - F1"	20	Aut.PA60	YES	Contin.	16,45	550X400X320

CENTRIFUGAL PUMP KIT FOR DIESEL TRANSFER “Dispenser Kit”

Centrifugal electric pump kit for diesel transfer. It is perfect for a quick and handy refuelling from barrels of diesel-powered vehicles. It is equipped with suction filter and integrated switch. It can be powered from electric line 230V / 115V and battery 12V / 24V.
It is connected to the barrel through M64x4 2’’ BSP.

“Dispenser Kit” series composed by:

Art. 091-5600-040 Electric pump 230V 50Hz 40 l/min

Art. 091-5602-040 Electric pump 115V 60Hz 40 l/min

Art. 091-5610-035 Electric pump 12V 35 l/min

Art. 091-5612-035 Electric pump 24 V 35 l/min

Art. 908-0500-040 Antistatic rubber hose for diesel ø19X27 mm 4 m lenght

Art. 093-5199-000 Plastic manual nozzle “MP120” Flow rate 120 l/min

Art. 093-5210-000 Automatic nozzle PA60 Flow rate 70 l/min

CENTRIFUGAL PUMP KIT FOR DIESEL TRANSFER “Dispenser Kit”

Ref.	Descrip.	Flow rate	Voltage	Power	Fixing to barrel	Conn. hose	Nozzle	Duty cycle	Wei-ght	Packaging
		l/min	AC V./Hz DC Volt	W	BSPG	Ø		min	Kg	mm
090-5400-040	Dispenser kit	**40**	230/50	224	2"	19	Man.	Contin.	4,00	410x400x270
090-5400-04X	Dispenser kit	**40**	115/60	320	2"	19	Man.	Contin.	4,00	410x400x270
090-5400-Y35	Dispenser kit	**35**	12	110	2"	19	Man.	Contin.	4,00	410x400x270
090-5400-Z35	Dispenser kit	**35**	24	135	2"	19	Man.	Contin.	4,00	410x400x270
090-5401-040	Dispenser kit	**40**	230/50	224	2"	19	Aut.PA60	Contin.	5,10	410x400x270
090-5401-04X	Dispenser kit	**40**	115/60	320	2"	19	Aut.PA60	Contin.	5,10	410x400x270
090-5401-Y35	Dispenser kit	**35**	12	110	2"	19	Aut.PA60	Contin.	5,10	410x400x270
090-5401-Z35	Dispenser kit	**35**	24	135	2"	19	Aut.PA60	Contin.	5,10	410x400x270

CENTRIFUGAL PUMP KIT FOR DIESEL TRANSFER “Dispenser Kit”

Centrifugal electric pump kit for diesel transfer. It is perfect for a quick and handy refuelling from barrels of diesel-powered vehicles. It is equipped with suction filter and integrated switch. It can be powered from electric line 230V / 115V and battery 12V / 24V.
It is connected to the barrel through M64x4 2’’ BSP.

“Dispenser Kit” series composed by

Art. 091-5600-040 Electric pump 230V 50Hz 40 l/min

Art. 091-5602-040 Electric pump 115V 60Hz 40 l/min

Art. 091-5610-035 Electric pump 12V 35 l/min

Art. 091-5612-035 Electric pump 24 V 35 l/min

Art. 092-5124-000 Digital turbine flow meter MEC 24
min/max flow rate 7/120 l/min

Art. 908-0500-040 Antistatic rubber hose for diesel ø19X27 mm 4 m lenght

Art. 093-5199-000 Plastic manual nozzle “MP120” Flow rate 120 l/min

Art. 093-5210-000 Automatic nozzle PA60 Flow rate 70 l/min

CENTRIFUGAL PUMP KIT FOR DIESEL TRANSFER “Dispenser Kit”

Ref.	Descrip.	Flow rate	Voltage	Power	Fixing to barell	Conn. hose	Nozzle	Flow meter	Duty cycle	Wei-ght	Packaging
		l/min	AC V./Hz DC Volt	W	BSPG	Ø			min	Kg	mm
090-5402-040	Dispenser kit	**40**	230/50	224	2"	19	Man	YES	Contin.	4,45	410x400x270
090-5402-04X	Dispenser kit	**40**	115/60	320	2"	19	Man.	YES	Contin.	4,45	410x400x270
090-5402-Y35	Dispenser kit	**35**	12	110	2"	19	Man.	YES	Contin.	4,45	410x400x270
090-5402-Z35	Dispenser kit	**35**	24	135	2"	19	Man.	YES	Contin.	4,45	410x400x270
090-5403-040	Dispenser kit	**40**	230/50	224	2"	19	Aut.PA60	YES	Contin.	5,45	410x400x270
090-5403-04X	Dispenser kit	**40**	115/60	320	2"	19	Aut.PA60	YES	Contin.	5,45	410x400x270
090-5403-Y35	Dispenser kit	**35**	12	110	2"	19	Aut.PA60	YES	Contin.	5,45	410x400x270
090-5403-Z35	Dispenser kit	**35**	24	135	2"	19	Aut.PA60	YES	Contin.	5,45	410x400x270

WALL DISPENSER FOR DIESEL TRANSFER “Compact”

Diesel transferring kit for private use. It allows the quick and safe filling of the vehicles.

All the accessories to complement the dispenser are available.

“Compact” composed by:

Art. 091-5081-045 12V Pump - power cable (sec. 4 mmq, 4 m lenght) with pincers and fuse - 45 l/min

Art. 091-5083-045 24V Pump- power cable (sec. 4 mmq, 4 m lenght) con pincers and fuse - 45 l/min

Art. 091-5081-060 12V Pump- power cable (sec. 4 mmq, 4 m lenght) with pincers and fuse - 60 l/min

Art. 091-5083-060 24V Pump- power cable (sec. 4 mmq, 4 m lenght) with pincers and fuse - 60 l/min

Art. 091-5095-060 Electric pump 230V 50Hz 60 l/min

Art. 091-5098-070 Electric pump 230V 50Hz 70 l/min

Art. 091-5100-100 Electric pump 230V 50Hz 100 l/min

Art. 091-5099-070 Electric pump 115V 60Hz 70 l/min

Art. 091-5101-100 Electric pump 115V 60Hz 100 l/min

Art. 908-0516-040 Connection hose ø 20 mm M-M 1” 4 m lenght

Art. 908-0616-040 Connection hose ø 25 mm M-M 1” 4 m lenght

Art. 093-5202-000 Aluminium manual nozzle MC100 Flow rate 100 l/min

Art. 093-5210-000 Automatic nozzle PA60 Flow rate 70 l/min

Art. 093-5220-000 Automatic nozzle PA120 Flow rate 120 l/min

OPTIONAL:

Cartridge filter **page 93**

Suction hose kit **page 95**

Art. 090-5056-000 Cabinet for pump unit

WALL DISPENSER FOR DIESEL TRANSFER “Compact”

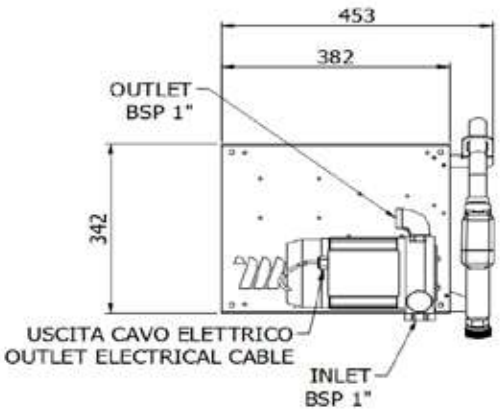

Ref.	Descrip.	Flow rate	Voltage	Power	Inlet-outlet	Conn. hose	Nozzle	Duty cycle	Wei-ght	Packaging
		l/min	AC V./Hz DC Volt	W	BSPG	Ø		min	Kg	mm
090-5043-060	Compact	**60**	230/50	460	F1" - F1"	20	Aut.PA60	Contin.	13,75	410X400X320
090-5043-070	Compact	**70**	230/50	552	F1" - F1"	20	Aut.PA60	Contin.	15,10	410X400X320
090-5043-100	Compact	**100**	230/50	805	F1" - F1"	25	Aut.PA120	Contin.	22,60	410X400X320
090-5044-060	Compact	**60**	230/50	460	F1" - F1"	20	Man.	Contin.	13,10	410X400X320
090-5044-070	Compact	**70**	230/50	552	F1" - F1"	20	Man.	Contin.	14,10	410X400X320
090-5044-100	Compact	**100**	230/50	805	F1" - F1"	25	Man.	Contin.	21,60	410X400X320
090-5043-07X	Compact	**70**	115/60	575	F1" - F1"	20	Aut.PA60	Contin.	15,10	410X400X320
090-5043-10X	Compact	**100**	115/60	977	F1" - F1"	25	Aut.PA120	Contin.	22,60	410X400X320
090-5044-07X	Compact	**70**	115/60	575	F1" - F1"	20	Man.	Contin.	14,10	410X400X320
090-5044-10X	Compact	**100**	115/60	977	F1" - F1"	25	Man.	Contin.	21,60	410X400X320
090-5043-Y45	Compact	**45**	12	264	F1" - F1"	20	Aut.PA60	40	11,50	410X400X320
090-5043-Z45	Compact	**45**	24	312	F1" - F1"	20	Aut.PA60	40	11,50	410X400X320
090-5043-Y60	Compact	**60**	12	336	F1" - F1"	20	Aut.PA60	40	13,00	410X400X320
090-5043-Z60	Compact	**60**	24	432	F1" - F1"	20	Aut.PA60	40	13,00	410X400X320
090-5044-Y45	Compact	**45**	12	264	F1" - F1"	20	Man.	40	11,00	410X400X320
090-5044-Z45	Compact	**45**	24	312	F1" - F1"	20	Man.	40	11,00	410X400X320
090-5044-Y60	Compact	**60**	12	336	F1" - F1"	20	Man.	40	12,50	410X400X320
090-5044-Z60	Compact	**60**	24	432	F1" - F1"	20	Man.	40	12,50	410X400X320

WALL DISPENSER FOR DIESEL TRANSFER “Compact”

Diesel transferring kit for private use. It allows the quick and safe filling of the vehicles.

It also permits to measure and record the dispensed quantities.

All the accessories to complement the dispenser are available.

“Compact” series composed by:

Art. 091-5081-045 12V Pump - power cable (sec. 4 mmq, 4 m lenght) with pincers and fuse - 45 l/min

Art. 091-5083-045 24V Pump - power cable (sec. 4 mmq, 4 m lenght) with pincers and fuse- 45 l/min

Art. 091-5081-060 12V Pump - power cable(sec. 4 mmq, 4 m lenght) with pincers and fuse - 60 l/min

Art. 091-5083-060 24V Pump- power cable (sec. 4 mmq, 4 m lenght) with pincers and fuse - 60 l/min

Art. 091-5095-060 Electric pump 230V 50Hz 60 l/min

Art. 091-5098-070 Electric pump 230V 50Hz 70 l/min

Art. 091-5100-100 Electric pump 230V 50Hz 100 l/min

Art. 091-5099-070 Electric pump 115V 60Hz 70 l/min

Art. 091-5101-100 Electric pump 115V 60Hz 100 l/min

Art. 908-0516-040 Connection hose ø 20 mm M-M 1” 4 m lenght

Art. 908-0616-040 Connection hose ø 25 mm M-M 1” 4 m lenght

Art. 093-5202-000 Aluminium manual nozzle MC100 Flow rate 100 l/min

Art. 093-5210-000 Automatic nozzle PA60 Flow rate 70 l/min

Art. 093-5220-000 Automatic nozzle PA120 Flow rate 120 l/min

Art. 092-5103-000 Mechanical flow meter 3 digits F1” 120 l/min 3C

Art. 092-5104-000 Mechanical flow meter 4 digits F1” 120 l/min 4C

OPTIONAL:

Cartridge filter page 93

Suction hose kit page 95

Art. 090-5056-000 Cabinet for pump unit

WALL DISPENSER FOR DIESEL TRANSFER “Compact”

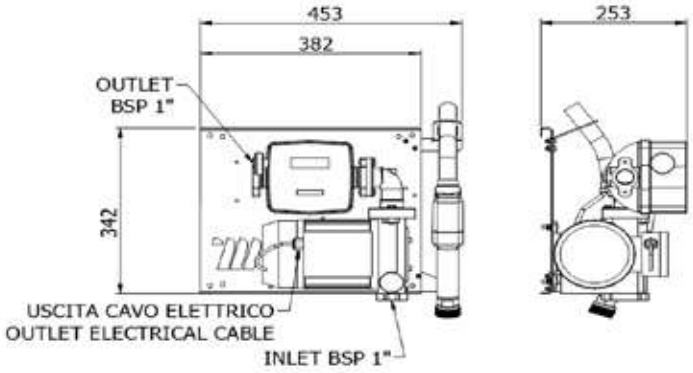

Ref.	Descrip.	Flow rate	Voltage	Power	Inlet-outlet	Conn. hose	Nozzle	Flow meter	Duty cycle	Wei-ght	Packaging
		l/min	AC V./Hz DC Volt	W	BSPG	Ø			min	Kg	mm
090-5045-060	Compact	**60**	230/50	460	F1"-F1"	20	Aut.PA60	3C	Contin.	16,00	410X400X320
090-5045-070	Compact	**70**	230/50	552	F1"-F1"	20	Aut.PA60	3C	Contin.	17,00	410X400X320
090-5045-100	Compact	**100**	230/50	805	F1"-F1"	25	Aut.PA120	4C	Contin.	22,00	410X400X320
090-5046-060	Compact	**60**	230/50	460	F1"-F1"	20	Manual	3C	Contin.	15,50	410X400X320
090-5046-070	Compact	**70**	230/50	552	F1"-F1"	20	Manual	3C	Contin.	16,50	410X400X320
090-5046-100	Compact	**100**	230/50	805	F1"-F1"	25	Manual	4C	Contin.	21,50	410X400X320
090-5045-07X	Compact	**70**	115/60	575	F1"-F1"	20	Aut.PA60	3C	Contin.	17,00	410X400X320
090-5045-10X	Compact	**100**	115/60	977	F1"-F1"	25	Aut.PA120	4C	Contin.	22,00	410X400X320
090-5046-07X	Compact	**70**	115/60	575	F1"-F1"	20	Manual	3C	Contin.	16,50	410X400X320
090-5046-10X	Compact	**100**	115/60	977	F1"-F1"	25	Manual	4C	Contin.	21,50	410X400X320
090-5045-Y45	Compact	**45**	12	264	F1"-F1"	20	Aut.PA60	3C	40	13,70	410X400X320
090-5045-Z45	Compact	**45**	24	312	F1"-F1"	20	Aut.PA60	3C	40	13,70	410X400X320
090-5045-Y60	Compact	**60**	12	336	F1"-F1"	20	Aut.PA60	3C	40	15,20	410X400X320
090-5045-Z60	Compact	**60**	24	432	F1"-F1"	20	Aut.PA60	3C	40	15,20	410X400X320
090-5046-Y45	Compact	**45**	12	264	F1"-F1"	20	Manual	3C	40	13,00	410X400X320
090-5046-Z45	Compact	**45**	24	312	F1"-F1"	20	Manual	3C	40	13,00	410X400X320
090-5046-Y60	Compact	**60**	12	336	F1"-F1"	20	Manual	3C	40	14,50	410X400X320
090-5046-Z60	Compact	**60**	24	432	F1"-F1"	20	Manual	3C	40	14,50	410X400X320

WALL DISPENSER FOR DIESEL TRANSFER “Compact”

Diesel transferring kit for private use. It allows the quick and safe filling of the vehicles.

It also permits to measure and record the dispensed quantities.

All the accessories to complement the dispenser are available.

“Compact” series composed by:

Art. 091-5081-045 12V Pump - power cable (sec. 4 mmq, 4 m lenght) with pincers and fuse - 45 l / min

Art. 091-5083-045 24V Pump - power cable (sec. 4 mmq, 4 m lenght) with pincers and fuse - 45 l / min

Art. 091-5081-060 12V Pump - power cable (sec. 4 mmq, 4 m lenght) with pincers and fuse - 60 l / min

Art. 091-5083-060 24V Pump - power cable (sec. 4 mmq, 4 m lenght) with pincers and fuse - 60 l / min

Art. 091-5095-060 Electric pump 230V 50Hz 60 l/min

Art. 091-5098-070 Electric pump 230V 50Hz 70 l/min

Art. 091-5100-100 Electric pump 230V 50Hz 100 l/min

Art. 091-5099-070 Electric pump 115V 60Hz 70 l/min

Art. 091-5101-100 Electric pump 115V 60Hz 100 l/min

Art. 908-0516-040 Connection hose Ø 20 mm M-M 1” 4 m lenght

Art. 908-0616-040 Connection hose Ø 25 mm M-M 1” 4 m lenght

Art. 093-5210-000 Automatic nozzle PA60 Flow rate 70 l/min

Art. 093-5220-000 Automatic nozzle PA120 Flow rate 120 l/min

Art. 092-5103-000 Mechanical flow meter 3 digits F1” 120 l/min 3C

Art. 092-5104-000 Mechanical flow meter 4 digits F1” 120 l/min 4C

Art. 094-5240-000 Water separating delivery filter for diesel 70 l/min

Art. 094-5245-000 Water separating delivery filter for diesel 150 l/min

OPTIONAL:

Suction hose kit page 95

Art. 090-5056-000 Cabinet

WALL DISPENSER FOR DIESEL TRANSFER “Compact”

Ref.	Descrip.	Flow Rate	Voltage	Power	Inlet-Outlet	Conn. Hose	Nozzle	Flow meter/ Filter	Duty Cicle	Wei-ght	Packaging
		l/min	AC V./Hz DC Volt	W	BSPG	Ø			min	Kg	mm
090-5047-060	Compact	**60**	230/50	460	F1"-F1"	20	Aut.PA60	YES 3C	Contin.	20,50	550X400X320
090-5047-070	Compact	**70**	230/50	552	F1"-F1"	20	Aut.PA60	YES 3C	Contin.	21,50	550X400X320
090-5047-100	Compact	**100**	230/50	805	F1"-F1"	25	Aut.PA120	YES 4C	Contin.	26,50	550X400X320
090-5047-07X	Compact	**70**	115/60	575	F1"-F1"	20	Aut.PA60	YES 3C	Contin.	21,50	550X400X320
090-5047-10X	Compact	**100**	115/60	977	F1"-F1"	25	Aut.PA120	YES 4C	Contin.	26,50	550X400X320
090-5047-Y45	Compact	**45**	12	264	F1"-F1"	20	Aut.PA60	YES 3C	40	18,20	550X400X320
090-5047-Z45	Compact	**45**	24	312	F1"-F1"	20	Aut.PA60	YES 3C	40	18,20	550X400X320
090-5047-Y60	Compact	**60**	12	336	F1"-F1"	20	Aut.PA60	YES 3C	40	19,70	550X400X320
090-5047-Z60	Compact	**60**	24	432	F1"-F1"	20	Aut.PA60	YES 3C	40	19,70	550X400X320

WALL DISPENSER FOR DIESEL TRANSFER “Wall Mec”

Diesel transferring kit for private use. It allows the quick and safe filling of the vehicles.
It also permits to measure and record the dispensed quantities.

“Wall Mec” series composed by:

Art. 091-5095-060 Electric pump 230V 50Hz 60 l/min
Art. 091-5098-070 Electric pump 230V 50Hz 70 l/min
Art. 091-5100-100 Electric pump 230V 50Hz 100 l/min

Art. 091-5099-070 Electric pump 115V 60Hz 70 l/min
Art. 091-5101-100 Electric pump 115V 60Hz 100 l/min

Art. 908-0516-060 Connection hose ø 20 mm M-M 1” 6 m lenght
Art. 908-0616-060 Connection hose ø 25 mm M-M 1” 6 m lenght

Art. 093-5210-000 Automatic nozzle PA60 Flow rate 70 l/min
Art. 093-5220-000 Automatic nozzle PA120 Flow rate 120 l/min

Art. 092-5103-000 Mechanical flow meter 3 digits F1” 120 l/min 3C
Art. 092-5104-000 Mechanical flow meter 4 digits F1” 120 l/min 4C

Art. 095-5440-040 Suction hose kit with valve Ø 25, 4 m lenght

WALL DISPENSER FOR DIESEL TRANSFER “Wall Mec”

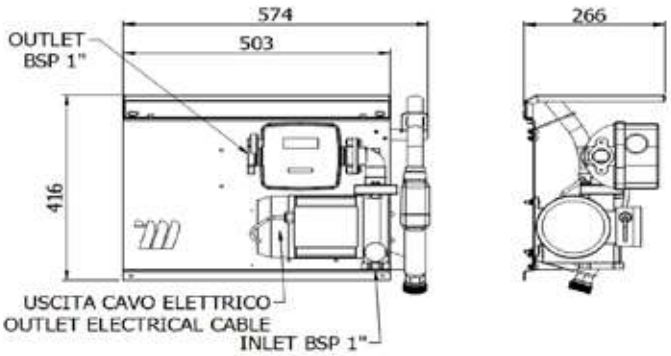

Ref.	Descrip.	Flow rate	Voltage	Power	Inlet-outlet	Conn. hose	Nozzle	Flow meter	Duty cycle	Wei-ght	Packaging
		l/min	AC V./Hz DC Volt	W	BSPG	Ø			min	Kg	mm

Without suction hose kit

090-5048-060	Wall Mec	**60**	230/50	460	F1" - F1"	20	Aut.PA60	3C	Contin.	19,00	550X400X320
090-5048-070	Wall Mec	**70**	230/50	552	F1" - F1"	20	Aut.PA60	3C	Contin.	20,50	550X400X320
090-5048-100	Wall Mec	**100**	230/50	805	F1" - F1"	25	Aut.PA120	4C	Contin.	25,50	550X400X320
090-5048-07X	Wall Mec	**70**	115/60	575	F1" - F1"	20	Aut.PA60	3C	Contin.	20,50	550X400X320
090-5048-10X	Wall Mec	**100**	115/60	977	F1" - F1"	25	Aut.PA120	4C	Contin.	25,50	550X400X320

With suction hose kit ref. 095-5440-040

090-5148-060	Wall Mec	**60**	230/50	460	F1" - F1"	20	Aut.PA60	3C	Contin.	20,50	550X400X320
090-5148-070	Wall Mec	**70**	230/50	552	F1" - F1"	20	Aut.PA60	3C	Contin.	21,70	550X400X320
090-5148-100	Wall Mec	**100**	230/50	805	F1" - F1"	25	Aut.PA120	4C	Contin.	26,70	550X400X320
090-5148-07X	Wall Mec	**70**	115/60	575	F1" - F1"	20	Aut.PA60	3C	Contin.	21,70	550X400X320
090-5148-10X	Wall Mec	**100**	115/60	977	F1" - F1"	25	Aut.PA120	4C	Contin.	26,70	550X400X320

WALL DISPENSER FOR DIESEL TRANSFER “Wall Mec”

Diesel transferring kit for private use. It allows the quick and safe filling of the vehicles.

It also permits to measure and record the dispensed quantities.

“Wall Mec” series composed by:

Art. 091-5095-060 Electric pump 230V 50Hz 60 l/min
Art. 091-5098-070 Electric pump 230V 50Hz 70 l/min
Art. 091-5100-100 Electric pump 230V 50Hz 100 l/min

Art. 091-5099-070 Electric pump 115V 60Hz 70 l/min
Art. 091-5101-100 Electric pump 115V 60Hz 100 l/min

Art. 908-0516-060 Connection hose ø 20 mm M-M 1” 6 m lenght
Art. 908-0616-060 Connection hose ø 25 mm M-M 1” 6 m lenght

Art. 093-5210-000 Automatic nozzle PA60 Flow rate 70 l/min
Art. 093-5220-000 Automatic nozzle PA120 Flow rate 120 l/min

Art. 092-5103-000 Mechanical flow meter 3 digits F1” 120 l/min 3C
Art. 092-5104-000 Mechanical flow meter 4 digits F1” 120 l/min 4C

Art. 094-5240-000 Water separating delivery filter for diesel 70 l/min
Art. 094-5245-000 Water separating delivery filter for diesel 150 l/min

Art. 095-5440-040 Suction hose kit with valve Ø 25, 4 m lenght

WALL DISPENSER FOR DIESEL TRANSFER “Wall Mec”

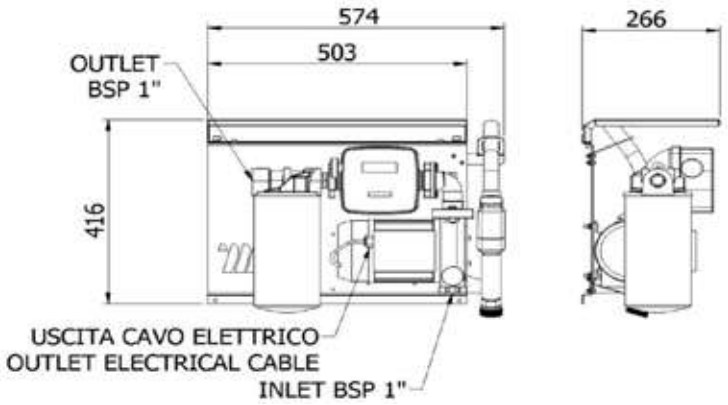

Ref.	Descrip.	Flow rate	Voltage	Power	Inlet-outlet	Conn. hose	Nozzle	Flow meter/ Filter	Duty cycle	Wei-ght	Packaging
		l/min	AC V./Hz DC Volt	W	BSPG	Ø			min	Kg	mm

Without suction hose kit

090-5049-060	Wall Mec	**60**	230/50	460	F1" - F1"	20	Aut.PA60	YES3C	Contin.	20,20	550X400X320
090-5049-070	Wall Mec	**70**	230/50	552	F1" - F1"	20	Aut.PA60	YES3C	Contin.	22,75	550X400X320
090-5049-100	Wall Mec	**100**	230/50	805	F1" - F1"	25	Aut.PA120	YES4C	Contin.	27,75	550X400X320
090-5049-07X	Wall Mec	**70**	115/60	575	F1" - F1"	20	Aut.PA60	YES3C	Contin.	22,75	550X400X320
090-5049-10X	Wall Mec	**100**	115/60	977	F1" - F1"	25	Aut.PA120	YES4C	Contin.	27,75	550X400X320

With suction hose kit Cod. 095-5440-040

090-5149-060	Wall Mec	**60**	230/50	460	F1" - F1"	20	Aut.PA60	YES3C	Contin.	21,70	550X400X320
090-5149-070	Wall Mec	**70**	230/50	552	F1" - F1"	20	Aut.PA60	YES3C	Contin.	24,00	550X400X320
090-5149-100	Wall Mec	**100**	230/50	805	F1" - F1"	25	Aut.PA120	YES4C	Contin.	29,00	550X400X320
090-5149-07X	Wall Mec	**70**	115/60	575	F1" - F1"	20	Aut.PA60	YES3C	Contin.	24,00	550X400X320
090-5149-10X	Wall Mec	**100**	115/60	977	F1" - F1"	25	Aut.PA120	YES4C	Contin.	29,00	550X400X320

CABINET DISPENSER FOR DIESEL TRANSFER “Meclube box”

Solid cabinet in anti-corrosion painted steel complete with key lock. The pump is inside the cabinet with anti-vibration supports. It is equipped with nozzle holder, microswitch to turn it on/off, automatic nozzle with swiveling joint. Diesel transfer system for private usage, it allows the quick and safe filling of vehicles, and permits to measure and record the dispensed quantities.

“Meclube Box” series composed by:

Art. 091-5095-060 Electric pump 230V 50Hz 60 l/min
Art. 091-5098-070 Electric pump 230V 50Hz 70 l/min
Art. 091-5100-100 Electric pump 230V 50Hz 100 l/min

Art. 091-5099-070 Electric pump 115V 60Hz 70 l/min
Art. 091-5101-100 Electric pump 115V 60Hz 100 l/min

Art. 908-0516-060 Connection hose ø 20 mm M-M 1” 6 m lenght
Art. 908-0616-060 Connection hose ø 25 mm M-M 1” 6 m lenght

Art. 093-5210-000 Automatic nozzle PA60 Flow rate 70 l/min
Art. 093-5220-000 Automatic nozzle PA120 Flow rate 120 l/min

Art. 092-5103-000 Mechanical flow meter 3 digits F1” 120 l/min 3C
Art. 092-5104-000 Mechanical flow meter 4 digits F1” 120 l/min 4C

Art. 094-5240-000 Water separating delivery filter for diesel 70 l/min
Art. 094-5245-000 Water separating delivery filter for diesel 150 l/min

Art. 090-5056-000 Cabinet

OPTIONAL:

Suction hose kit **page 95**

CABINET DISPENSER FOR DIESEL TRANSFER “Meclube Box”

Ref.	Descrip.	Flow rate	Voltage	Power	Inlet-Outlet	Conn. hose	Nozzle	Flow meter/ Filter	Duty cycle	Wei-ght	Packaging
		l/min	AC V./Hz DC Volt	W	BSPG	Ø			min	Kg	mm
090-5050-060	Meclube box	**60**	230/50	460	F1" - F1"	20	Aut.PA60	YES 3C	Contin.	46,00	615X375X605
090-5050-070	Meclube box	**70**	230/50	552	F1" - F1"	20	Aut.PA60	YES 3C	Contin.	47,00	615X375X605
090-5050-100	Meclube box	**100**	230/50	805	F1" - F1"	25	Aut.PA120	YES 4C	Contin.	49,00	615X375X605
090-5050-07X	Meclube box	**70**	115/60	575	F1" - F1"	20	Aut.PA60	YES 3C	Contin.	47,00	615X375X605
090-5050-10X	Meclube box	**100**	115/60	977	F1" - F1"	25	Aut.PA120	YES 4C	Contin.	49,00	615X375X605

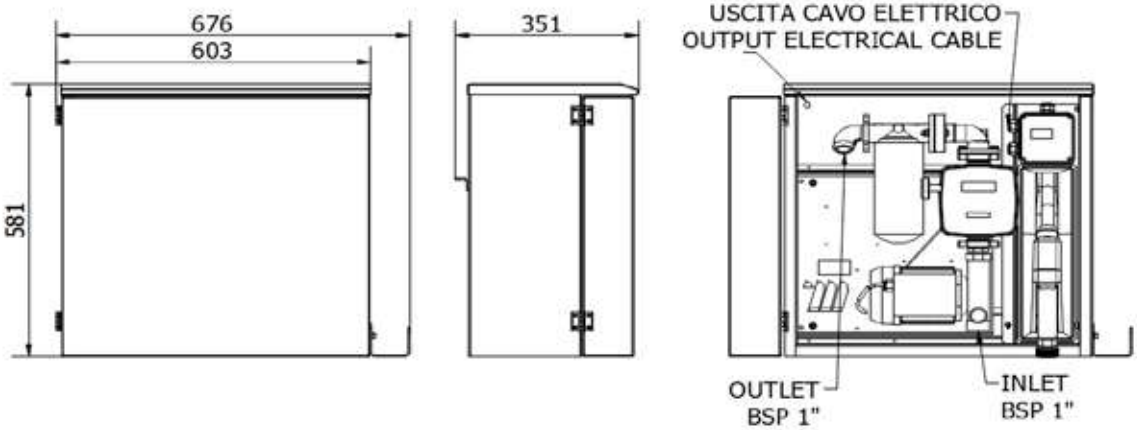

The Mec-Reel manufactured by Meclube is a dispatching group composed by an automatic hose reel with 15 m hose, pump with continuous power, water filter in suction and automatic nozzle, all components are integrated in a strong support. The Mec-Reel can be easily installed due to its compactness and versatility. It is the perfect solution to complete tanks or for mobile units.

“Mec-Reel” series composed by:

Art. 091-5081-060 12V Pump - power cable (sec. 4 mmq. m 4 lenght) with pincers and fuse - 60 l/min
Art. 091-5083-060 24V Pump - power cable (sec. 4 mmq. m 4 lenght) with pincers and fuse - 60 l/min

Art. 070-1408-515 Automatic fixed diesel hose reel 10 bar
Hose lenght 15 m - Ø hose 3/4” - Inlet/Outlet G 1”

Art. 093-5210-000 Automatic nozzle PA60 flow rate 70 l/min

Art. 094-5240-000 Water separating delivery filter for diesel 70 l/min

“Mec-Reel” DISTRIBUTOR

Ref.	Description	Flow rate	Voltage	Power	Inlet	Hose Reel	Nozzle	Filter	Weight	Packaging
		l/min	DC Volt	W	BSPG				Kg	mm
090-5060-Y60	Mec-Reel	**60**	12	336	F1"	Ø 3/4”-15 m	Aut.PA60	YES	57,5	475x670x840
090-5060-Z60	Mec-Reel	**60**	24	432	F1"	Ø 3/4”-15 m	Aut.PA60	YES	57,5	475x670x840

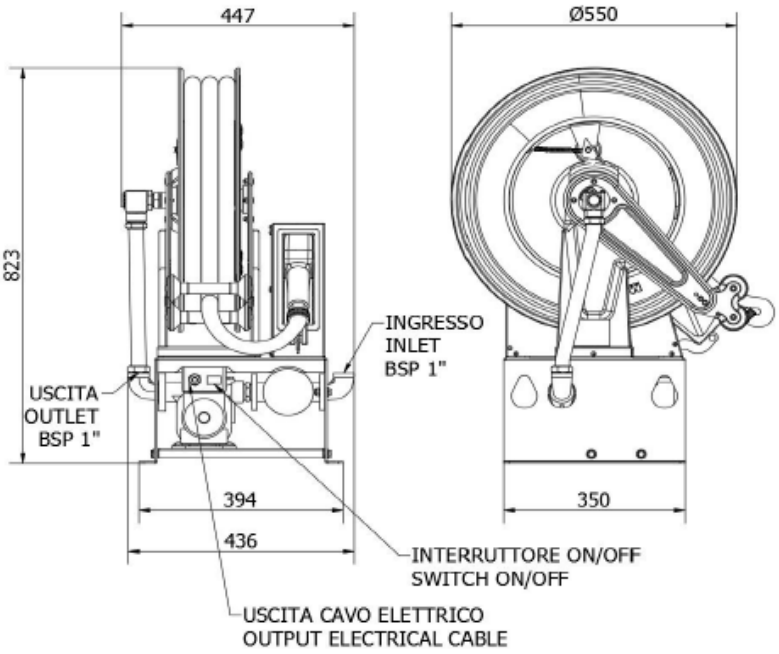

DIESEL TRANSFER SYSTEM “Cami Dispenser”

Diesel transfer system for private usage, it allows the quick and safe filling of vehicles, and permits to measure and record the dispensed quantities. It is equipped with nozzle holder, microswitch to turn the pump on/off, automatic nozzle with swiveling joint, and extractable hose support. The equipment can be fixed to the wall, to a tank or to its own support column.

“Cami Dispenser” series composed by:

Art. 091-5081-060 12V Pump - power cable (sec. 4 mmq, 4 m lenght) with pincers and fuse- 60 l/min
Art. 091-5083-060 24V Pump - power cable (sec. 4 mmq, 4 m lenght) with pincers and use carrier - 60 l/min

Art. 091-5095-060 Electric pump 230V 50Hz 60 l/min
Art. 091-5098-070 Electric pump 230V 50Hz 70 l/min
Art. 091-5100-100 Electric pump 230V 50Hz 100 l/min

Art. 091-5099-070 Electric pump 115V 60Hz 70 l/min
Art. 091-5101-100 Electric pump 115V 60Hz 100 l/min

Art. 908-0516-040 Connection hose ø 20 mm M-M 1” 4 m lenght
Art. 908-0616-040 Connection hose ø 25 mm M-M 1” 4 m lenght

Art. 093-5210-000 Automatic nozzle PA60 Flow rate 70 l/min
Art. 093-5220-000 Automatic nozzle PA120 Flow rate 120 l/min

Art. 092-5103-000 Mechanical flow meter 3 digits F1” 120 l/min - 3C
Art. 092-5104-000 Mechanical flow meter 4 digits F1” 120 l/min - 4C

OPTIONAL:

Art. 090-5072-000 Support column Cami-Dispenser

Art. 094-5240-000 Water separating delivery filter for diesel 70 l/min
Art. 094-5245-000 Water separating delivery filter for diesel 150 l/min

DIESEL TRANSFER SYSTEM "Cami Dispenser"

Ref.	Descrip.	Flow rate	Voltage	Power	Inlet-Outlet	Conn. hose	Nozzle	Flow meter	Duty cycle	Wei-ght	Packaging
		l/min	AC V./Hz DC Volt	W	BSPG	Ø			min	Kg	mm
090-5070-060	Cami Dispenser	**60**	230/50	460	F1" - F1"	20	Aut.PA60	3C	Contin.	26,00	505X355X425
090-5070-070	Cami Dispenser	**70**	230/50	552	F1" - F1"	20	Aut.PA60	3C	Contin.	27,00	505X355X425
090-5070-100	Cami Dispenser	**100**	230/50	805	F1" - F1"	25	Aut.PA120	4C	Contin.	33,00	505X355X425
090-5070-07X	Cami Dispenser	**70**	115/60	575	F1" - F1"	20	Aut.PA60	3C	Contin.	27,00	505X355X425
090-5070-10X	Cami Dispenser	**100**	115/60	977	F1" - F1"	25	Aut.PA120	4C	Contin.	33,00	505X355X425
090-5070-Y60	Cami Dispenser	**60**	12	336	F1" - F1"	20	Aut.PA60	3C	40	26,00	505X355X425
090-5070-Z60	Cami Dispenser	**60**	24	432	F1" - F1"	20	Aut.PA60	3C	40	26,00	505X355X425

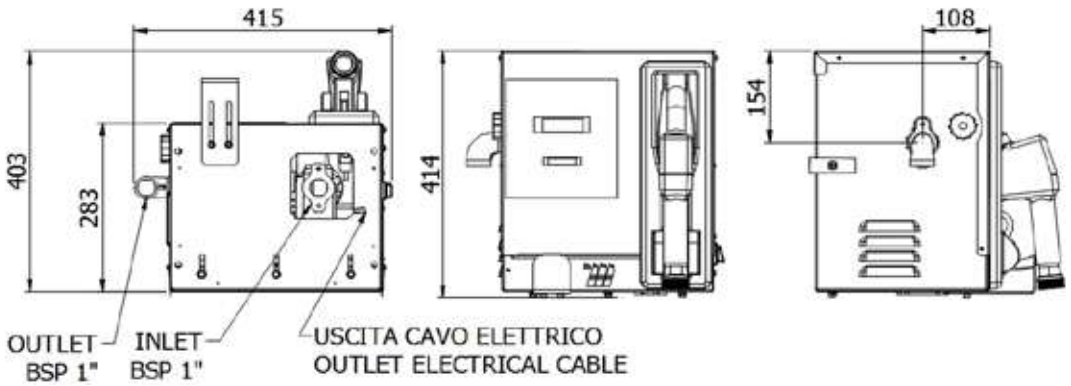

DIESEL TRANSFER SYSTEM "Cami Dispenser"

Diesel transfer system for private usage, it allows the quick and safe filling of vehicles, and permits to measure and record the dispensed quantities. It is equipped with nozzle holder, microswitch to turn the pump on/off, automatic nozzle with swiveling joint, and extractable hose support. The equipment can be fixed to the ground.

"Cami Dispenser" series composed by:

Art. 091-5081-060 12V Pump - power cable (sec. 4 mmq, 4 m lenght) with pincers and fuse - 60 l/min
Art. 091-5083-060 24V Pump - power cable (sec. 4 mmq, 4 m lenght) with pincers and fuse - 60 l/min

Art. 091-5095-060 Electric pump 230V 50Hz 60 l/min
Art. 091-5098-070 Electric pump 230V 50Hz 70 l/min
Art. 091-5100-100 Electric pump 230V 50Hz 100 l/min

Art. 091-5099-070 Electric pump 115V 60Hz 70 l/min
Art. 091-5101-100 Electric pump 115V 60Hz 100 l/min

Art. 908-0516-040 Connection hose ø 20 mm M-M 1" 4 m lenght
Art. 908-0616-040 Connection hose ø 25 mm M-M 1" 4 m lenght

Art. 093-5210-000 Automatic nozzle PA60 Flow rate 70 l/min
Art. 093-5220-000 Automatic nozzle PA120 Flow rate 120 l/min

Art. 092-5103-000 Mechanical flow meter 3 digits F1" 120 l/min - 3C
Art. 092-5104-000 Mechanical flow meter 4 digits F1" 120 l/min - 4C

OPTIONAL:

Art. 094-5240-000 Water separating delivery filter for diesel 70 l/min
Art. 094-5245-000 Water separating delivery filter for diesel 150 l/min

DIESEL TRANSFER SYSTEM “Cami Dispenser”

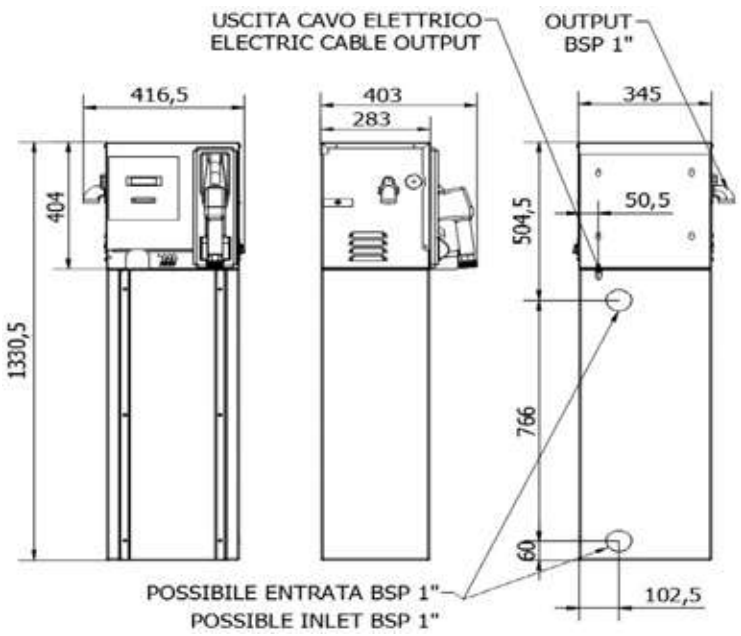

Ref.	Descrip.	Flow rate	Voltage	Power	Inlet-Outlet	Conn. hose	Nozzle	Flow meter	Duty cycle	Weight
		l/min	AC V./Hz DC Volt	W	BSPG	Ø			min	Kg
090-5072-060	Cami Dispenser	**60**	230/50	460	F1" - F1"	20	Aut.PA60	3C	Contin.	49,50
090-5072-070	Cami Dispenser	**70**	230/50	552	F1" - F1"	20	Aut.PA60	3C	Contin.	50,50
090-5072-100	Cami Dispenser	**100**	230/50	805	F1" - F1"	25	Aut.PA120	4C	Contin.	56,50
090-5072-07X	Cami Dispenser	**70**	115/60	575	F1" - F1"	20	Aut.PA60	3C	Contin.	50,50
090-5072-10X	Cami Dispenser	**100**	115/60	977	F1" - F1"	25	Aut.PA120	4C	Contin.	56,50
090-5072-Y60	Cami Dispenser	**60**	12	336	F1" - F1"	20	Aut.PA60	3C	40	49,50
090-5072-Z60	Cami Dispenser	**60**	24	432	F1" - F1"	20	Aut.PA60	3C	40	49,50

Ref.	Packaging (mm)	NR. of boxes
090-5072-060	505X355X425 - 365X305X945	2
090-5072-070	505X355X425 - 365X305X945	2
090-5072-100	505X355X425 - 365X305X945	2
090-5072-07X	505X355X425 - 365X305X945	2
090-5072-10X	505X355X425 - 365X305X945	2

Ref.	Packaging (mm)	NR. of boxes
090-5072-Y60	505X355X425 - 365X305X945	2
090-5072-Z60	505X355X425 - 365X305X945	2

DIESEL TRANSFER SYSTEM “Electronic Cami Dispenser”

Diesel transferring kit in solid structure for private use. It allows the quick and clean filling of the vehicles. It permits the following functions: the identification of the authorised users, the pre-selection of dispensed quantitty, the detection of the total consumption and the single-user consumption, the storage of the deliveries and the management of 200 users. The system is equipped with key-manager to start the delivery quickly. The system includes the nozzle holder with microswitch to turn the pump on/off, automatic nozzle with swiveling joint and side hose holder. The equipment can be fixed to the wall, to a tank or to its own support column.

“Electronic Cami Dispenser” series composed by:

Art. 091-5095-060 Electric pump 230V 50Hz 60 l/min
Art. 091-5098-070 Electric pump 230V 50Hz 70 l/min
Art. 091-5100-100 Electric pump 230V 50Hz 100 l/min

Art. 091-5099-070 Electric pump 115V 60Hz 70 l/min
Art. 091-5101-100 Electric pump 115V 60Hz 100 l/min

Art. 908-0516-040 Connection hose ø 20 mm M-M 1” 4 m lenght
Art. 908-0616-040 Connection hose ø 25 mm M-M 1” 4 m lenght

Art. 093-5210-000 Automatic nozzle PA60 Flow rate 70 l/min
Art. 093-5220-000 Automatic nozzle PA120 Flow rate 120 l/min

Art. 092-5200-230 Electronic control unit MecGest 110/230V 50Hz
Software included

Art. 092-5170-110 Mechanical flow meter with pulses MGI-110 - 5-110 l/min

Art. 092-5220-000 Codified communication kit USB key reader for PC

Art. 092-5300-000 Red Key - Manager - 1 piece

OPTIONAL:

Art. 092-5300-010 Kit Blue Keys - Users - 10 pieces

Art. 090-5072-000 Base column Cami-Dispenser

Art. 094-5240-000 Water separating delivery filter for diesel 70 l/min
Art. 094-5245-000 Water separating delivery filter for diesel 150 l/min

DIESEL TRANSFER SYSTEM “Electronic Cami Dispenser”

Ref.	Descrip.	Flow rate	Voltage	Power	Inlet-Outlet	Conn. hose	Nozzle	Flow meter	Duty cycle	Wei-ght	Packaging
		l/min	AC V./Hz DC Volt	W	BSPG	Ø			min	Kg	mm
090-5074-060	Cami Dispenser	**60**	230/50	460	F1" - F1"	20	Aut.PA60	MGI110	Contin.	29,00	505X355X425
090-5074-070	Cami Dispenser	**70**	230/50	552	F1" - F1"	20	Aut.PA60	MGI110	Contin.	30,00	505X355X425
090-5074-100	Cami Dispenser	**100**	230/50	805	F1" - F1"	25	Aut.PA120	MGI110	Contin.	36,50	505X355X425
090-5074-07X	Cami Dispenser	**70**	115/60	575	F1" - F1"	20	Aut.PA60	MGI110	Contin.	30,00	505X355X425
090-5074-10X	Cami Dispenser	**100**	115/60	977	F1" - F1"	25	Aut.PA120	MGI110	Contin.	36,50	505X355X425

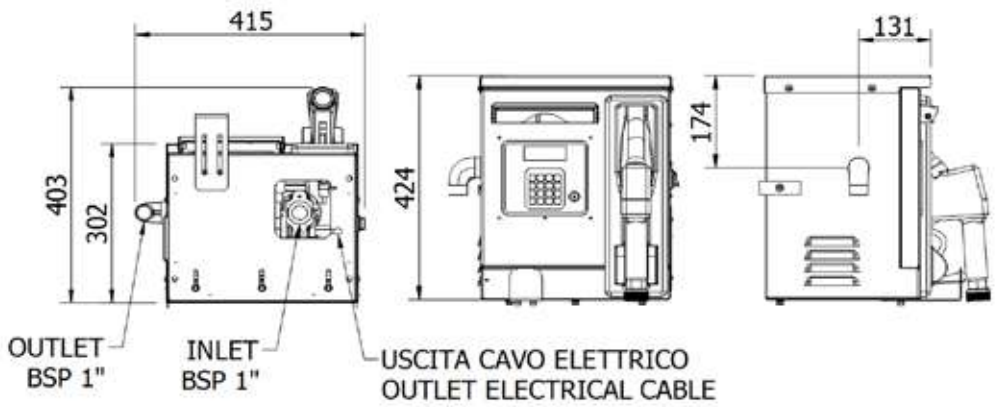

DIESEL TRANSFER SYSTEM “Electronic Cami Dispenser”

Diesel transferring kit in solid structure for private use. It allows the quick and clean filling of the vehicles. It permits the following functions: the identification of the authorised users, the pre-selection of dispensed quantitty, the detection of the total consumption and the single-user consumption, the storage of the deliveries and the management of 200 users. The system is equipped with key-manager to start the delivery quickly. The system includes the nozzle holder with microswitch to turn the pump on/off, automatic nozzle with swiveling joint and side hose holder. The equipment can be fixed to the wall, to a tank or to its own column.

“Electronic Cami Dispenser” series composed by:

Art. 091-5095-060 Electric pump 230V 50Hz 60 l/min
Art. 091-5098-070 Electric pump 230V 50Hz 70 l/min
Art. 091-5100-100 Electric pump 230V 50Hz 100 l/min

Art. 091-5099-070 Electric pump 115V 60Hz 70 l/min
Art. 091-5101-100 Electric pump 115V 60Hz 100 l/min

Art. 908-0516-040 Connection hose ø 20 mm M-M 1” 4 m lenght
Art. 908-0616-040 Connection hose ø 25 mm M-M 1” 4 m lenght

Art. 093-5210-000 Automatic nozzle PA60 Flow rate 70 l/min
Art. 093-5220-000 Automatic nozzle PA120 Flow rate 120 l/min

Art. 092-5200-230 Electronic control unit MecGest 110/230V 50Hz
Software included

Art. 092-5170-110 Mechanical pulsed flow meter MGI-110 - 5-110 l/min

Art. 092-5220-000 Codified communication kit USB key reader for PC

Art. 092-5300-000 Red Key- Manager - nr. 1 pc

OPTIONAL:

Art. 092-5300-010 Kit blue keys - Users - nr. 10 pcs.

Art. 094-5240-000 Water separating delivery filter for diesel 70 l/min
Art. 094-5245-000 Water separating delivery filter for diesel 150 l/min

DIESEL TRANSFER SYSTEM “Electronic Cami Dispenser”

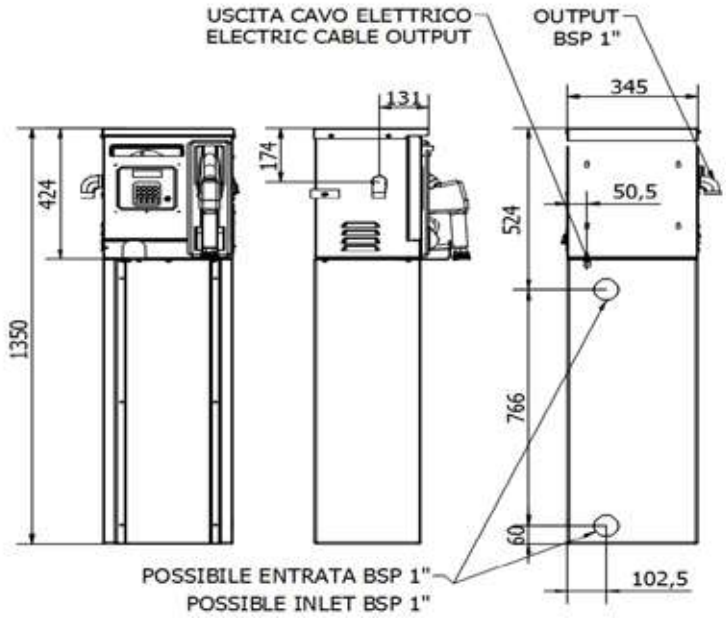

Ref.	Descrip.	Voltage	Flow rate	Power	Inlet-outlet	Conn. hose	Nozzle	Flow meter	Duty cycle	Weight
		l/min	AC V./Hz DC Volt	W	BSPG	Ø			min	Kg
090-5075-060	Cami Dispenser	**60**	230/50	460	F1" - F1"	20	Aut.PA60	MGI110	Contin.	52,50
090-5075-070	Cami Dispenser	**70**	230/50	552	F1" - F1"	20	Aut.PA60	MGI110	Contin.	53,50
090-5075-100	Cami Dispenser	**100**	230/50	805	F1" - F1"	25	Aut.PA120	MGI110	Contin.	60,00
090-5075-07X	Cami Dispenser	**70**	115/60	575	F1" - F1"	20	Aut.PA60	MGI110	Contin.	53,50
090-5075-10X	Cami Dispenser	**100**	115/60	977	F1" - F1"	25	Aut.PA120	MGI110	Contin.	60,00

Ref.	Packaging (mm)	NR. of boxes
090-5075-060	505X355X425 - 365X305X945	2
090-5075-070	505X355X425 - 365X305X945	2
090-5075-100	505X355X425 - 365X305X945	2
090-5075-07X	505X355X425 - 365X305X945	2
090-5075-10X	505X355X425 - 365X305X945	2

DIESEL TRANSFER SYSTEM “Electronic Cami Dispenser LC”

Diesel transferring kit for private use. It allows the quick and safe filling of the vehicles. It also permits to measure and record the dispensed quantities. It permits the following functions: the preselection of the dispatched quantity, to see the total dispensed and each single dispense, to memorize the dispatches. The systems comes with a Lan Connection that enables the constant communication with the software, the reception of the type of configuration from remote and the report sending of the dispenses, MecGest can manage up to 200 users. The system is equipped with user-key and manager-key, to quickly start the dispatch. It is equipped with nozzle holder, microswitch to turn the pump on/off, automatic nozzle with swiveling joint, and extractable hose support. The equipment can be fixed to the wall, to a tank or to its own column.

“Electronic Cami Dispenser LC” series composed by:

Art. 091-5095-060 Electric pump 230V 50Hz 60 l/min
Art. 091-5098-070 Electric pump 230V 50Hz 70 l/min
Art. 091-5100-100 Electric pump 230V 50Hz 100 l/min

Art. 091-5099-070 Electric pump 115V 60Hz 70 l/min
Art. 091-5101-100 Electric pump 115V 60Hz 100 l/min

Art. 908-0516-040 Connection hose ø 20 mm M-M 1” 4 m lenght
Art. 908-0616-040 Connection hose ø 25 mm M-M 1” 4 m lenght

Art. 093-5210-000 Automatic nozzle PA60 Flow rate 70 l/min
Art. 093-5220-000 Automatic nozzle PA120 Flow rate 120 l/min

Art. 092-5200-230 Electronic control unit MecGest 110/230V 50Hz
Software included

Art. 092-5170-110 Mechanical pulsed flow meter MGI-110 - 5-110 l/min

Art. 092-5350-001 Codified Kit Lan Connection USB-RS485

OPTIONAL:

Art. 092-5300-010 Kit blue keys - Users - nr. 10 pcs

Art. 092-5220-000 Codified communication kit USB key reader for PC

Art. 090-5072-000 Base Column Cami-Dispenser

Art. 094-5240-000 Water separating delivery filter for diesel 70 l/min
Art. 094-5245-000 Water separating delivery filter for diesel 150 l/min

DIESEL TRANSFER SYSTEM “Electronic Cami Dispenser LC”

Ref.	Descrip.	Flow rate	Voltage	Power	Inlet-Outlet	Conn. hose	Nozzle	Flow meter	Duty cycle	Wei-ght	Packaging
		l/min	AC V./Hz DC Volt	W	BSPG	Ø			min	Kg	mm
090-5076-060	Cami Dispenser	**60**	230/50	460	F1" - F1"	20	Aut.PA60	MGI110	Contin.	29,00	505X355X425
090-5076-070	Cami Dispenser	**70**	230/50	552	F1" - F1"	20	Aut.PA60	MGI110	Contin.	30,00	505X355X425
090-5076-100	Cami Dispenser	**100**	230/50	805	F1" - F1"	25	Aut.PA120	MGI110	Contin.	36,50	505X355X425
090-5076-07X	Cami Dispenser	**70**	115/60	575	F1" - F1"	20	Aut.PA60	MGI110	Contin.	30,00	505X355X425
090-5076-10X	Cami Dispenser	**100**	115/60	977	F1" - F1"	25	Aut.PA120	MGI110	Contin.	36,50	505X355X425

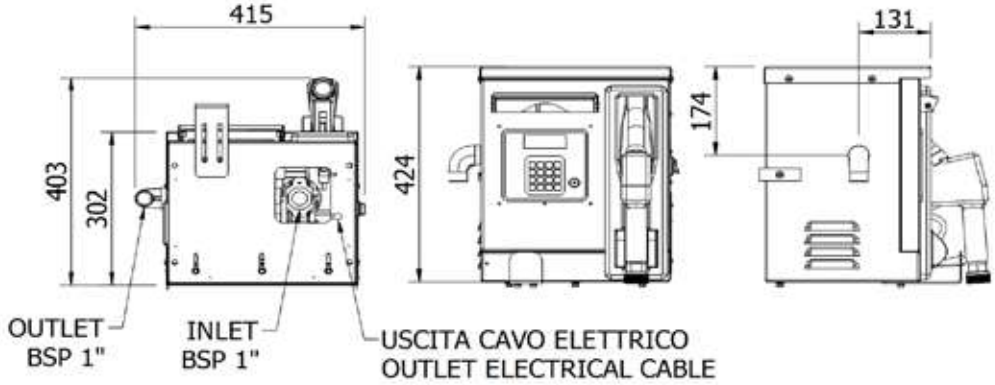

DIESEL TRANSFER SYSTEM “Electronic Cami Dispenser LC”

Diesel transferring kit for private use. It allows the quick and safe filling of the vehicles. It allows the quick and safe filling of the vehicles. It permits the following functions: the preselection of the dispatched quantity, to see the total dispensed and each single dispense, to memorize the dispatches. The systems comes with a Lan Connection that enables the constant communication with the software, the reception of the type of configuration from remote and the report sending of the dispenses, MecGest can manage up to 200 users. It is equipped with nozzle holder, microswitch to turn the pump on/off, automatic nozzle with swiveling joint, and extractable hose support. The equipment can be fixed to the ground.

“Electronic Cami Dispenser LC” series composed by:

Art. 091-5095-060 Electric pump 230V 50Hz 60 l/min
Art. 091-5098-070 Electric pump 230V 50Hz 70 l/min
Art. 091-5100-100 Electric pump 230V 50Hz 100 l/min

Art. 091-5099-070 Electric pump 115V 60Hz 70 l/min
Art. 091-5101-100 Electric pump 115V 60Hz 100 l/min

Art. 908-0516-040 Connection hose ø 20 mm M-M 1” 4 m lenght
Art. 908-0616-040 Connection hose ø 25 mm M-M 1” 4 m lenght

Art. 093-5210-000 Automatic nozzle PA60 Flow rate 70 l/min
Art. 093-5220-000 Automatic nozzle PA120 Flow rate 120 l/min

Art. 092-5200-230 Electronic control unit MecGest 110/230V 50Hz
Software included

Art. 092-5170-110 Mechanical pulsed flow meter MGI-110 - 5-110 l/min

Art. 092-5350-001 Codified Kit Lan Connection USB-RS485

OPTIONAL:

Art. 092-5300-010 Kit blue keys - Users - nr. 10 pcs

Art. 092-5220-000 Codified communication kit USB key reader for PC

Art. 094-5240-000 Water separating delivery filter for diesel 70 l/min
Art. 094-5245-000 Water separating delivery filter for diesel 150 l/min

DIESEL TRANSFER SYSTEM “Electronic Cami Dispenser LC”

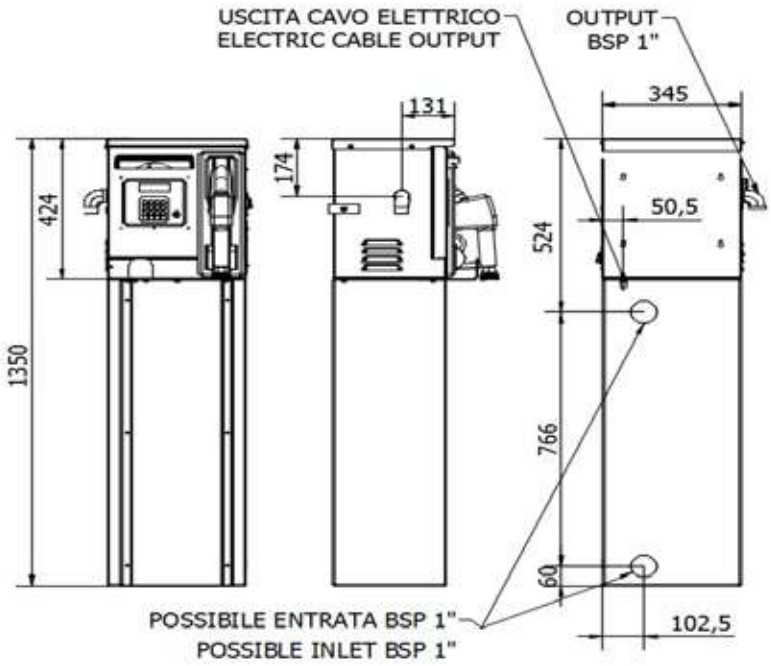

Ref.	Descrip.	Flow rate	Voltage	Power	Inlet-outlet	Conn. hose	Nozzle	Flow meter	Duty cycle	Weight
		l/min	AC V./Hz DC Volt	W	BSPG	Ø			min	Kg
090-5077-060	Cami Dispenser	**60**	230/50	460	F1" - F1"	20	Aut.PA60	MGI110	Contin.	52,50
090-5077-070	Cami Dispenser	**70**	230/50	552	F1" - F1"	20	Aut.PA60	MGI110	Contin.	53,50
090-5077-100	Cami Dispenser	**100**	230/50	805	F1" - F1"	25	Aut.PA120	MGI110	Contin.	60,00
090-5077-07X	Cami Dispenser	**70**	115/60	575	F1" - F1"	20	Aut.PA60	MGI110	Contin.	53,50
090-5077-10X	Cami Dispenser	**100**	115/60	977	F1" - F1"	25	Aut.PA120	MGI110	Contin.	60,00

Ref.	Packaging (mm)	NR. of boxes
090-5077-060	505X355X425 - 365X305X945	2
090-5077-070	505X355X425 - 365X305X945	2
090-5077-100	505X355X425 - 365X305X945	2
090-5077-07X	505X355X425 - 365X305X945	2
090-5077-10X	505X355X425 - 365X305X945	2

DIESEL TRANSFER SYSTEM “Gaia Service”

Diesel transferring kit in solid structure for private use. It allows the quick and clean filling of the vehicles. It is equipped with automatic nozzle with swiveling joint, water filter absorption able to dispense the product free from impurites, microswitch to turn the pump on/off and side hose holder. Removable frontal panel for easy maitenance. The equipment can be fixed to the ground.

“Gaia Service” series composed by:

Art. 091-5098-070 Electric pump 230V 50Hz 70 l/min
Art. 091-5100-100 Electric pump 230V 50Hz 100 l/min

Art. 091-5099-070 Electric pump 115V 60Hz 70 l/min
Art. 091-5101-100 Electric pump 115V 60Hz 100 l/min

Art. 908-0516-040 Connection hose ø 20 mm M-M 1” 4 m lenght
Art. 908-0616-040 Connection hose ø 25 mm M-M 1” 4 m lenght

Art. 093-5210-000 Automatic nozzle PA60 Flow rate 70 l/min
Art. 093-5220-000 Automatic nozzle PA120 Flow rate 120 l/min

Art. 092-5104-000 Mechanical flow meter 4 digits F1” 120 l/min

Art. 094-5240-000 Water separating delivery filter for diesel 70 l/min
Art. 094-5245-000 Water separating delivery filter for diesel 150 l/min

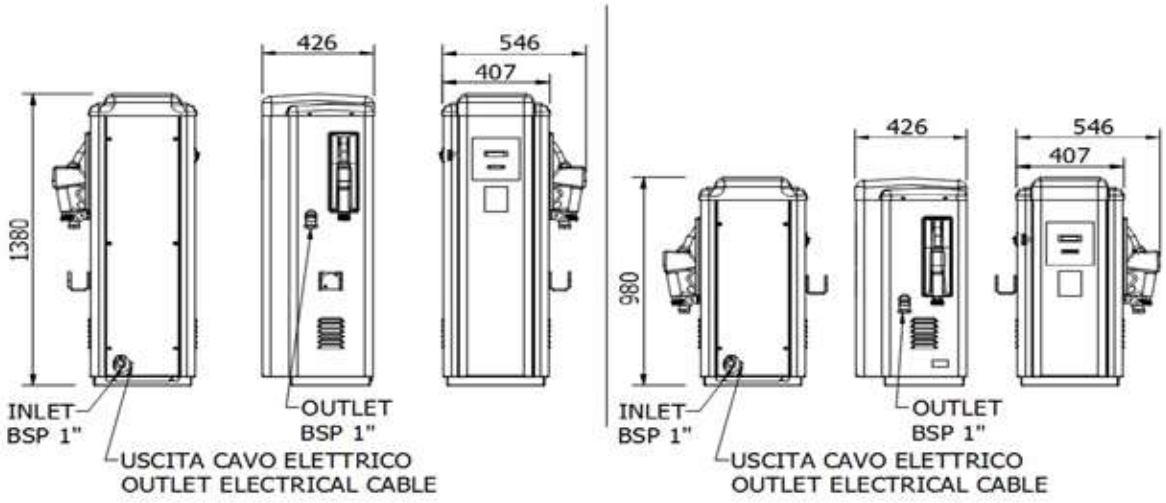

H. 1380 mm **H.980 mm - Tank**

DIESEL TRANSFER SYSTEM “Gaia Service”

H. 1380 mm

H.980 mm - Tank

Ref.	Descrip.	Flow rate	Voltage	Power	Inlet-outlet	Conn. hose	Nozzle	Flow me-ter/Filter	Duty cycle	Weight
		l/min	AC V./Hz DC Volt	W	BSPG	Ø			min	Kg
H. 1380 mm										
090-5080-070	Gaia Service	**70**	230/50	552	F1" - F1"	20	Aut.PA60	YES 4C	Contin.	69,00
090-5080-100	Gaia Service	**100**	230/50	805	F1" - F1"	25	Aut.PA120	YES 4C	Contin.	76,00
090-5080-07X	Gaia Service	**70**	115/60	575	F1" - F1"	20	Aut.PA60	YES 4C	Contin.	69,00
090-5080-10X	Gaia Service	**100**	115/60	977	F1" - F1"	25	Aut.PA120	YES 4C	Contin.	76,00
H. 980 mm	**Suitable for fastening to tank**									
090-5081-070	Gaia "Tank"	**70**	230/50	552	F1" - F1"	20	Aut.PA60	YES 4C	Contin.	61,00
090-5081-100	Gaia "Tank"	**100**	230/50	805	F1" - F1"	25	Aut.PA120	YES 4C	Contin.	68,00
090-5081-07X	Gaia "Tank"	**70**	115/60	575	F1" - F1"	20	Aut.PA60	YES 4C	Contin.	61,00
090-5081-10X	Gaia "Tank"	**100**	115/60	977	F1" - F1"	25	Aut.PA120	YES 4C	Contin.	68,00

Ref.	Packaging (mm)	NR. of boxes
090-5080-070	530X490X1410	1
090-5080-100	530X490X1410	1
090-5080-07X	530X490X1410	1
090-5080-10X	530X490X1410	1

Ref.	Packaging (mm)	NR. of boxes
090-5081-070	530X490X1010	1
090-5081-100	530X490X1010	1
090-5081-07X	530X490X1010	1
090-5081-10X	530X490X1010	1

DIESEL TRANSFER SYSTEM “Electronic Gaia Service”

Diesel transferring kit in solid structure for private use. It allows the quick and clean filling of the vehicles. It permits the following functions: the identification of the authorised users, the pre-selection of dispensed quantitty, the detection of the total consumption and the single-user consumption, the storage of the deliveries and the management of 200 users. The system is equipped with key-manager to start the delivery quickly. The system includes the nozzle holder with microswitch to turn the pump on/off, automatic nozzle with swiveling joint and side hose holder.

“Electronic Gaia Service” series composed by:

Art. 091-5098-070 Electric pump 230V 50Hz 70 l/min
Art. 091-5100-100 Electric pump 230V 50Hz 100 l/min

Art. 091-5099-070 Electric pump 115V 60Hz 70 l/min
Art. 091-5101-100 Electric pump 115V 60Hz 100 l/min

Art. 908-0516-040 Connection hose ø 20 mm M-M 1” 4 m lenght
Art. 908-0616-040 Connection hose ø 25 mm M-M 1” 4 m lenght

Art. 093-5210-000 Automatic nozzle PA60 Flow rate 70 l/min
Art. 093-5220-000 Automatic nozzle PA120 Flow rate 120 l/min

Art. 092-5200-230 Electronic control unit MecGest 110/230V 50Hz
Software included

Art. 092-5170-110 Mechanical pulsed flow meter MGI-110 - 5-110 l/min

Art. 094-5240-000 Water separating delivery filter for diesel 70 l/min
Art. 094-5245-000 Water separating delivery filter for diesel 150 l/min

Art. 092-5220-000 Codified communication kit USB key reader for PC

Art. 092-5300-000 Red Key- Manager - nr. 1 pc.

OPTIONAL:

Art. 092-5300-010 Kit blue keys - Users - nr. 10 pcs

H. 1380 mm

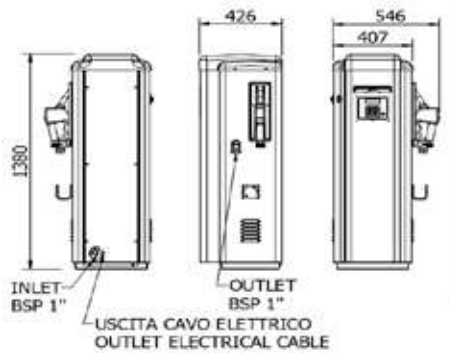

H.980 mm - Tank

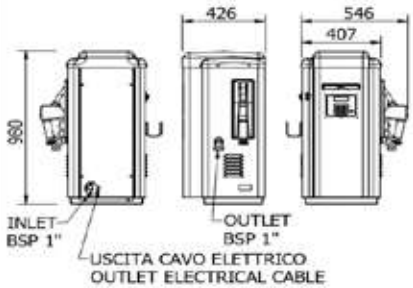

DIESEL TRANSFER SYSTEM “Electronic Gaia Service”

H. 1380 mm

H.980 mm - Tank

Ref.	Descrip.	Flow rate	Voltage	Power	Inlet-outlet	Conn. hose	Nozzle	Flow me-ter/Flter	Duty cycle	Weight
		l/min	AC V./Hz DC Volt	W	BSPG	Ø			min	Kg
H. 1380 mm										
090-5084-070	Gaia Service	**70**	230/50	552	F1" - F1"	20	Aut.PA60	YES	Contin.	69,00
090-5084-100	Gaia Service	**100**	230/50	805	F1" - F1"	25	Aut.PA120	YES	Contin.	76,00
090-5084-07X	Gaia Service	**70**	115/60	575	F1" - F1"	20	Aut.PA60	YES	Contin.	69,00
090-5084-10X	Gaia Service	**100**	115/60	977	F1" - F1"	25	Aut.PA120	YES	Contin.	76,00
H. 980 mm	**Suitable for fastening to tank**									
090-5085-070	Gaia "Tank"	**70**	230/50	552	F1" - F1"	20	Aut.PA60	YES	Contin.	61,00
090-5085-100	Gaia "Tank"	**100**	230/50	805	F1" - F1"	25	Aut.PA120	YES	Contin.	68,00
090-5085-07X	Gaia "Tank"	**70**	115/60	575	F1" - F1"	20	Aut.PA60	YES	Contin.	61,00
090-5085-10X	Gaia "Tank"	**100**	115/60	977	F1" - F1"	25	Aut.PA120	YES	Contin.	68,00

Ref.	Packaging (mm)	NR. of boxes
090-5084-070	530X490X1410	1
090-5084-100	530X490X1410	1
090-5084-07X	530X490X1410	1
090-5084-10X	530X490X1410	1

Ref.	Packaging (mm)	NR. of boxes
090-5085-070	530X490X1010	1
090-5085-100	530X490X1010	1
090-5085-07X	530X490X1010	1
090-5085-10X	530X490X1010	1

DIESEL TRANSFER SYSTEM “Electronic Gaia Service LC”

Diesel transferring kit in solid structure for private use. It allows the quick and clean filling of the vehicles. It also permits to measure and record the dispensed quantities. It permits the following functions: the pre-selection of the dispatched quantity, to see the total dispensed and each single dispense, to memorize the dispatches. The systems comes with a Lan Connection that enables the constant communication with the software, the reception of the type of configuration from remote and the report sending of the dispenses, MecGest can manage up to 200 users. The system includes the nozzle holder with microswitch to turn the pump on/off, automatic nozzle with swiveling joint and hose holder.

“Electronic Gaia Service LC” series composed by:

Art. 091-5098-070 Electric pump 230V 50Hz 70 l/min
Art. 091-5100-100 Electric pump 230V 50Hz 100 l/min

Art. 091-5099-070 Electric pump 115V 60Hz 70 l/min
Art. 091-5101-100 Electric pump 115V 60Hz 100 l/min

Art. 908-0516-040 Connection hose ø 20 mm M-M 1” 4 m lenght
Art. 908-0616-040 Connection hose ø 25 mm M-M 1” 4 m lenght

Art. 093-5210-000 Automatic nozzle PA60 Flow rate 70 l/min
Art. 093-5220-000 Automatic nozzle PA120 Flow rate 120 l/min

Art. 092-5200-230 Electronic control unit MecGest 110/230V 50Hz
Software included

Art. 092-5170-110 Mechanical pulsed flow meter MGI-110 - 5-110 l/min

Art. 094-5240-000 Water separating delivery filter for diesel 70 l/min
Art. 094-5245-000 Water separating delivery filter for diesel 150 l/min

Art. 092-5350-001 Codified Kit Lan Connection USB-RS485

OPTIONAL:

Art. 092-5300-010 Kit blue keys - Users - nr. 10 pcs

Art. 092-5220-000 Codified communication kit USB key reader for PC

H. 1380 mm

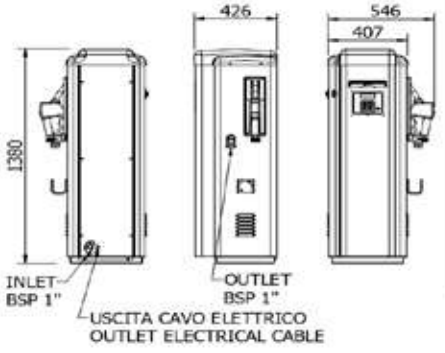

H.980 mm - Tank

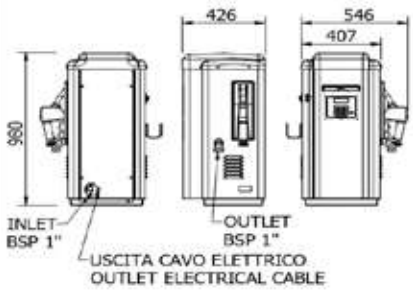

DIESEL TRANSFER SYSTEM “Electronic Gaia Service LC”

H. 1380 mm

H.980 mm - Tank

Ref.	Descrip.	Flow rate	Voltage	Power	Inlet-outlet	Conn. hose	Nozzle	Flow me-ter/Filter	Duty cycle	Weight
		l/min	AC V./Hz DC Volt	W	BSPG	Ø			min	Kg
H. 1380 mm										
090-5086-070	Gaia Service	**70**	230/50	552	F1" - F1"	20	Aut.PA60	YES	Contin.	69,00
090-5086-100	Gaia Service	**100**	230/50	805	F1" - F1"	25	Aut.PA120	YES	Contin.	76,00
090-5086-07X	Gaia Service	**70**	115/60	575	F1" - F1"	20	Aut.PA60	YES	Contin.	69,00
090-5086-10X	Gaia Service	**100**	115/60	977	F1" - F1"	25	Aut.PA120	YES	Contin.	76,00
H. 980 mm	**Suitable for fastening to tank**									
090-5087-070	Gaia "Tank"	**70**	230/50	552	F1" - F1"	20	Aut.PA60	YES	Contin.	61,00
090-5087-100	Gaia "Tank"	**100**	230/50	805	F1" - F1"	25	Aut.PA120	YES	Contin.	68,00
090-5087-07X	Gaia "Tank"	**70**	115/60	575	F1" - F1"	20	Aut.PA60	YES	Contin.	61,00
090-5087-10X	Gaia "Tank"	**100**	115/60	977	F1" - F1"	25	Aut.PA120	YES	Contin.	68,00

Ref.	Packaging (mm)	NR. of boxes
090-5086-070	530X490X1410	1
090-5086-100	530X490X1410	1
090-5086-07X	530X490X1410	1
090-5086-10X	530X490X1410	1

Ref.	Packaging (mm)	NR. of boxes
090-5087-070	530X490X1010	1
090-5087-100	530X490X1010	1
090-5087-07X	530X490X1010	1
090-5087-10X	530X490X1010	1

ELECTRONIC CONTROL UNIT “MecGest Box”

Electronic control unit to manage the diesel transfer for private usage. It allows the measurement and record of the dispatched quantities and the following functions: identification of authorized vehicles, preselection of quantity to dispatch, it detects the total dispense and the single ones, it allows the memorization of the dispenses and it can handle 200 users. The system comes with a manager-key or Lan connection. The system can be completed with electric pump, nozzle holder with microswitch for switching on and off the pump, mechanical pulsed flow meter. The equipment is designed to be fixed to the wall or to tanks.

“MecGest Box” series composed by:

Art. 092-5200-230 Electronic control unit MecGest 110/230V 50Hz complete with software

Art. 092-5220-000 Communication kit USB keys reader for codified PC

Art. 092-5300-000 Red Key- Manager - 1 piece

Art. 092-5350-000 Codified Kit Lan Connection USB - RS485

OPTIONAL:

Art. 092-5300-010 Kit blue keys - Users - 10 pcs

Art. 091-5095-060 Electric pump 230V 50Hz 60 l / min
Art. 091-5098-070 Electric pump 230V 50Hz 70 l / min
Art. 091-5100-100 Electric pump 230V 50Hz 100 l / min

Art. 091-5099-070 Electric pump 115V 60Hz 70 l / min
Art. 091-5101-100 Electric pump 115V 60Hz 100 l / min

Art. 092-5170-110 Mechanical pulsed flow meter MGI-110 - 5-110 l/min

Art. F90-9910-000 Aluminium nozzle holder with micro

Art. 092-5402-100 Signal cable 2 poles l. 100 m shielded

ELECTRONIC CONTROL UNIT “MecGest Box”

Ref.	Description	Voltage	Communication kit USB keys reader for codified PC	Lan Connection kit USB - R	Weight	Packaging
		AC V./Hz DC Volt			kg	mm
092-5510-000	MecGesrt Box	230/50 - 115/60	YES	NO	6,50	285X285X230
092-5520-000	MecGesrt Box LC	230/50 - 115/60	NO	YES	6,50	285X285X230

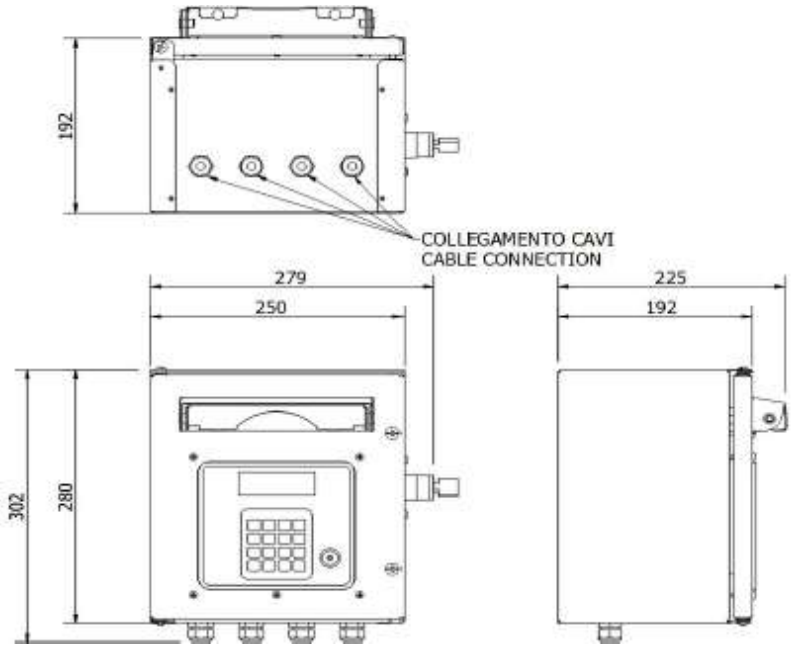

Electronic control unit that allows the refuelling of groups of vehicles. It offers the possibility to register the diesel supplies information and categorize them by user, vehicle, date and time. The equipment has to be used for private usage.

MecGest CONFIGURATION OPTIONS:

Art. 092-5200-230

OPTION 1

Art. 092-5220-000 + 092-5300-000

Art. 092-5300-010

OPTION 2

Art. 092-5350-001

OPTION 3 = OPTION 2 + OPTIONAL

Art. 092-5350-001 + 092-5220-000+ 092-5300-010

OPTIONAL:

Art. 092-5300-010 + 092-5220-000

OPTION 1/ COMMUNICATION KIT WITH MEMORY-KEY: Red key and its reader: through this option it is possible to download the data of the diesel supplies and activate new user-codes. This procedure is done through the use of the red key and its own reader that have to be used with the PC and our software MecGest. The identification of the users and of the vehicles to enable the diesel supplies is made through the PIN code.

OPTION 2/ CABLE COMMUNICATION KIT: LAN connection cable for the direct connection with the PC and MecGest software. Also in this case it is possible to download the data of the diesel supplies and activate new user-codes with direct cable connection. The identification of the users and of the vehicles to enable the diesel supplies is made through the PIN code.

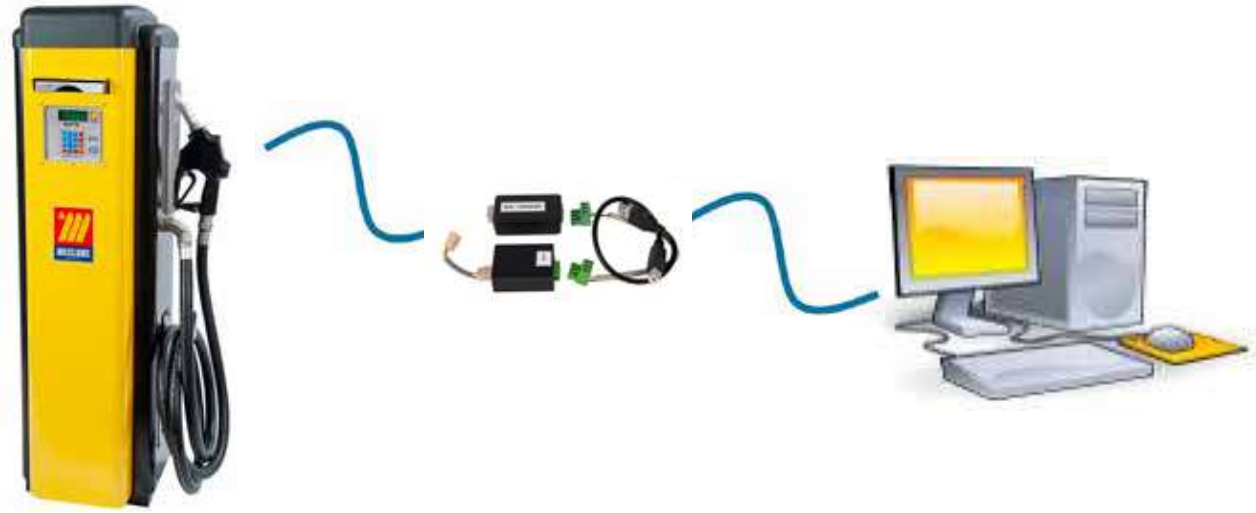

OPTION 3/ CABLE COMMUNICATION KIT + KEY READER + PACK 10 IDENTIFICATION KEYS: Converter and LAN connection cable for the direct connection to the PC and to MecGest software, and key reader with identification keys. Additionally, compared to previous options, it is possible to configurate the blue keys for users/vehicles in order to enable the diesel supplies. The diesel supply through PIN code is still available and the download of supply data or the activation of new keys or PIN are possible through LAN cable.

MINIMUM SYSTEM REQUISITES FOR MEC-GEST SOFTWARE: Operating system Microsoft Windows XP, 7, 8, 10 or superior, free USB port.

DIESEL TANK 220

Rigid polyethylene tank for diesel transport for private use in total exemption for ADR (see ADR Regulation at page 180), with built-in transfer unit consisting of rotary vane self-priming pump available in various voltages (12-24V), delivery hose ø 20 mm, 4 m lenght, automatic nozzle with swiveling joint. The system is available at 220 liters capacity, can be integrated with flow meter for measuring diesel. Equipped with pressurinzing/depressurizing relief valve and lockable lid.

"Diesel Tank" series composed by:

Art. 090-6220-000 Only 220 l Tank

Art. 091-5081-045 Pump 12V - power cable (sec. 4 mmq, 4 m lenght) with pincers and fuse - 45 l/min

Art. 091-5083-045 24V Pump - power cable (sec. 4 mmq, 4 m lenght) wih pincers and fuse - 45 l/min

Art. 908-0516-040 Connection hose ø 20 mm M-M 1" 4 m lenght

Art. 093-5210-000 Automatic nozzle PA60 Flow rate 70 l/min

Art. 092-5124-000 Digital turbine flow meter MEC 24 min/max flow rate 7/120 l/min

DIESEL TANK 220

Ref.	Descrip.	Flow rate	Voltage	Power	Inlet-outlet	Conn. hose	Nozzle	Flow meter	Duty cycle	Wei-ght	Packaging
		l/min	AC V./Hz DC Volt	W	BSPG	Ø			min	Kg	mm
090-6220-012	Tank 220 l	**45**	12	264	F1" - F1"	20	Aut.PA60	NO	40	25,00	600X910X665
090-6220-024	Tank 220 l	**45**	24	312	F1" - F1"	20	Aut.PA60	NO	40	25,00	600X910X665
090-6221-012	Tank 220 l	**45**	12	264	F1" - F1"	20	Aut.PA60	YES	40	25,30	600X910X665
090-6221-024	Tank 220 l	**45**	24	312	F1" - F1"	20	Aut.PA60	YES	40	25,30	600X910X665

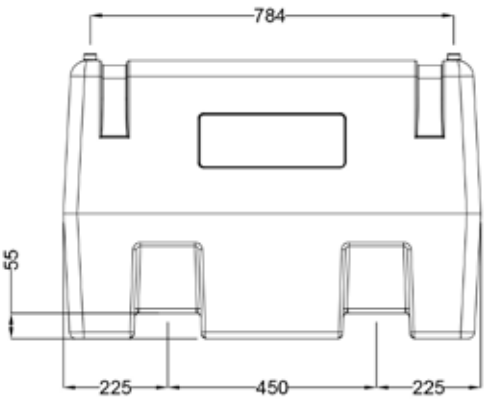

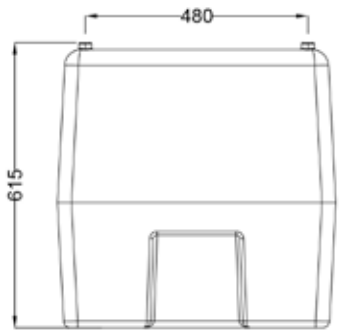

DIESEL TANK 330

Rigid polyethylene tank for diesel transport for personal use in total exemption for ADR (see ADR Regulation at page 180), with built-in transfer unit consisting of rotary vane self-priming pump available in various voltages (12-24V), delivery hose ø 20 mm, 4 m lenght, automatic nozzle with swiveling joint. The system is available at 330 liters capacity, can be integrated with flow meter for measuring diesel and level probe. Equipped with pressurinzing/depressurizing relief valve and lockable lid.

“Diesel Tank” series composed by:

Art. 090-6330-000 Only 330 l Tank

Art. 091-5081-045 12V Pump - power cable (sec. 4 mmq, 4 m lenght) with pincers and fuse - 45 l/min

Art. 091-5083-045 24V Pump - power cable (sec. 4 mmq, 4 m lenght) with pincers and fuse - 45 l/min

Art. 908-0516-040 Connection hose ø 20 mm M-M 1” 4 m lenght

Art. 093-5210-000 Automatic nozzle PA60 Flow rate 70 l/min

Art. 092-5124-000 Digital turbine flow meter MEC 24 min/max flow rate 7/120 l/min

Art. 092-6000-220 Probe for tank 330 l - 440 l

DIESEL TANK 330

Ref.	Descrip.	Flow rate	Voltage	Power	Inlet-outlet	Conn. hose	Nozzle	Flow meter	Duty cycle	Wei-ght	Packaging
		l/min	AC V./Hz DC Volt	W	BSPG	Ø			min	Kg	mm
090-6330-012	Tank 330 l	**45**	12	264	F1" - F1"	20	Aut.PA60	NO	40	44,00	1200x800x650
090-6330-024	Tank 330 l	**45**	24	312	F1" - F1"	20	Aut.PA60	NO	40	44,00	1200x800x650
090-6331-012	Tank 330 l	**45**	12	264	F1" - F1"	20	Aut.PA60	YES	40	44,30	1200x800x650
090-6331-024	Tank 330 l	**45**	24	312	F1" - F1"	20	Aut.PA60	YES	40	44,30	1200x800x650

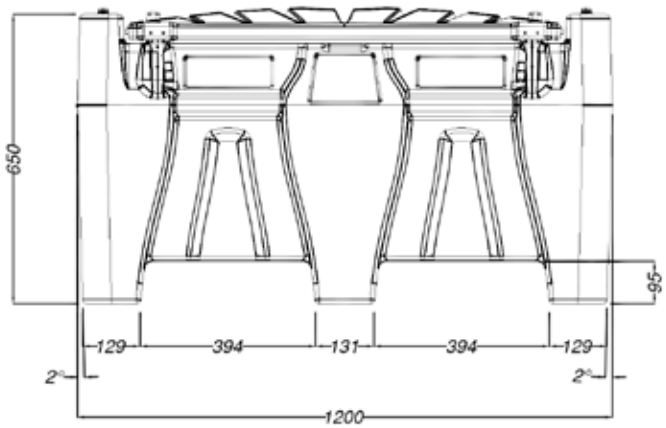

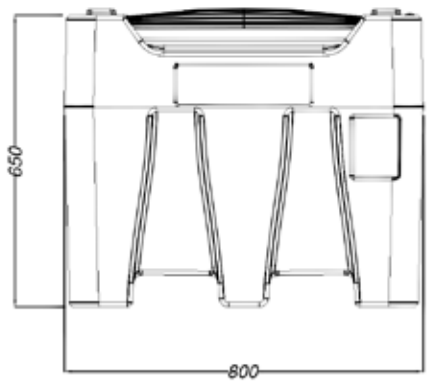

DIESEL TANK 440

Rigid polyethylene tank for diesel transport for private use in total exemption for ADR (see ADR Regulation at page 180), with built-in transfer unit consisting of rotary vane self-priming pump available in various voltages (12-24V), delivery hose ø 20 mm, 4 m lenght, automatic nozzle with swiveling joint. The system is available at 440 liters capacity, can be integrated with flow meter for measuring diesel and level probe. Equipped with pressurinzing/depressurizing relief valve and lockable lid.

“Diesel Tank” series composed by:

Art. 090-6440-000 Only 440 l Tank

Art. 091-5081-045 12V Pump - power cable (sec. 4 mmq, 4 m lenght) with pincers and fuse - 45 l/min

Art. 091-5083-045 24V Pump - power cable (sec. 4 mmq, 4 m lenght) with pincers and fuse - 45 l/min

Art. 908-0516-040 Connection hose ø 20 mm M-M 1” 4 m lenght

Art. 093-5210-000 Automatic nozzle PA60 Flow rate 70 l/min

Art. 092-5124-000 Digital turbine flow meter MEC 24 min/max flow rate 7/120 l/min

Art. 092-6000-220 Probe for tank 330 l - 440 l

DIESEL TANK 440

Ref.	Descrip.	Flow rate	Voltage	Power	Inlet-outlet	Conn. hose	Nozzle	Flow meter	Duty cycle	Wei-ght	Packaging
		l/min	AC V./Hz DC Volt	W	BSPG	Ø			min	Kg	mm
090-6440-012	Tank 440 l	**45**	12	264	F1" - F1"	20	Aut.PA60	NO	40	53,00	1200x800x785
090-6440-024	Tank 440 l	**45**	24	312	F1" - F1"	20	Aut.PA60	NO	40	53,00	1200x800x785
090-6441-012	Tank 440 l	**45**	12	264	F1" - F1"	20	Aut.PA60	YES	40	53,30	1200x800x785
090-6441-024	Tank 440 l	**45**	24	312	F1" - F1"	20	Aut.PA60	YES	40	53,30	1200x800x785

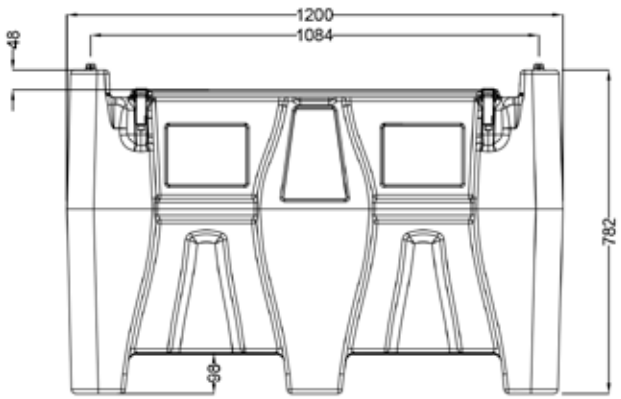

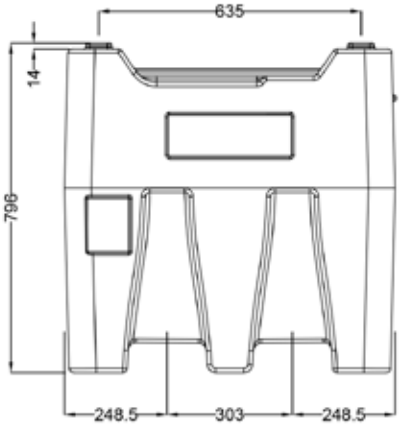

DIESEL-AdBlue® TANK 400+50

Combined tank for Diesel and AdBlue® transport for private use in total exemption for ADR (see ADR Regulation at page 180). Made of polyethylene with reinforced lockable lid. Diesel compartment with aluminium filling plug and integrated safety valve, AdBlue® compartment polyethylene plug. Complete with tank level indicator and suction filter only for diesel compartment. The tank is provided with chamfers to be lifted when it is full and grips to be lifted when empty. It is equipped with slots for positioniong the fastening belts at the support base. Diesel and AdBlue® compartments supplied with 4 m long cable with pincers for the connection to power battery supply.

“Diesel-AdBlue® Tank” series composed by:

Art. 090-6450-000 Only 400 l Tank + 50 l without pump

Art. 091-5081-045 12V Pump - power cable (sec. 4 mmq, 4 m lenght) with pincers and fuse - 45 l/min

Art. 098-6000-012 AdBlue® submerged pump 12V-15 l/min power cable (sec.2,5 mmq. 4 m lenght) with pincers and fuse

Art. 092-5124-000 Digital turbine flow meter MEC 24 min/max flow rate 7/120 l/min

Art. 908-0516-040 Connection hose ø 20 mm M-M 1” 4 m lenght for diesel

Art. 909-0500-040 Delivery hose EPDM ø 19x29 mm M-M 4 m lenght for AdBlue®

Art. 099-5199-000 Manual plastic nozzle “AD90” Flow rate 90 l/min

Art. 093-5210-000 Automatic nozzle PA60 Flow rate 70 l/min

Art. 092-6000-220 Probe for tank 330 l - 440 l

DIESEL-AdBlue® TANK 400+50

Ref.	Descrip.	Liquid	Flow rate	Voltage	Power	Inlet-outlet	Conn. hose	Nozzle	Flow meter	Duty cycle	Wei-ght	Packaging
			l/min	AC V./Hz DC Volt	W	BSPG	Ø	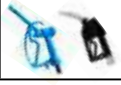		min	kg	mm
	400 l	Diesel	**45**	12	264	F1"-F1"	20	Aut.PA60	NO	40		
090-6450-012	Tank 400 + 50										57,00	1200X800X796
	50 l	AdBlue®	**15**	12	26		19	Man.AD90	NO	-		
	400 l	Diesel	**45**	12	264	F1"-F1"	20	Aut.PA60	YES	40		
090-6451-012	Tank 400 + 50										57,30	1200X800X796
	50 l	AdBlue®	**15**	12	26		19	Man.AD90	NO	-		

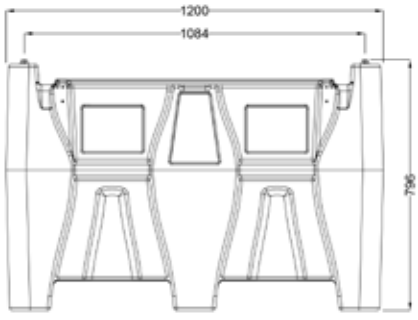

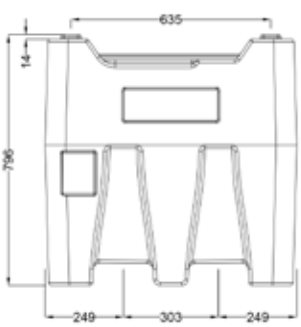

DIESEL-AdBlue® TANK
AdBlue® “Diesel-AdBlue® Tank 900+100”

Combined tank for Diesel and AdBlue® transport for private use in partial exemption paragraph 1.1.3.6 ADR (see ADR Regulation at page 180). Made of polyethylene with reinforced lockable lid. Diesel compartment with 2’’ aluminium filling plug and integrated 3 effects safety valve, internal breakwater bulkheads are integrated to grant the maximum security during the transport. AdBlue® compartment with 2’’ polyethylene plug. Complete with tank level indicator and suction filter only for Diesel compartment. The tank is provided with chamfers to be lifted when it is full and grips to be lifted when empty. It is equipped with slots for positioning the fastening belts at the support base. Diesel and AdBlue® compartments are supplied with 4 m long cable with pincers for the connection to the power battery supply.

“Diesel-AdBlue® Tank” series composed by:

Art. 090-6900-000 Only 900 l Tank + 100 l without pump

Art. 091-5081-060 12V Pump - power cable (sec. 4 mmq, 4 m lenght) with pincers and fuse - 60 l/min

Art. 098-6000-012 AdBlue® submerged pump 12V-15 l/min power cable (sec.2,5 mmq. 4 m lenght) with pincers and fuse

Art. 092-5124-000 Digital turbine flow meter MEC 24 min/max flow rate 7/120 l/min

Art. 908-0516-060 Connection hose ø 20 mm M-M 1” 6 m lenght for diesel

Art. 909-0500-060 Delivery hose EPDM ø 19x29 mm M-M 6 m lenght for AdBlue®

Art. 099-5199-000 Manual plastic nozzle “AD90” Flow rate 90 l/min

Art. 093-5210-000 Automatic nozzle PA60 Flow rate 70 l/min

DIESEL-AdBlue® TANK
AdBlue® “Diesel-AdBlue® Tank 900+100”

Ref.	Descrip.	Liquid	Flow rate	Voltage	Power	Inlet-outlet	Conn. hose	Nozzle	Flow meter	Duty cycle	Wei-ght	Packaging
			l/min	AC V./Hz DC Volt	W	BSPG	Ø			min	kg	mm
	900 l	Diesel	**60**	12	336	F1"-F1"	20	Aut.PA60	NO	40		
090-6900-012	Tank 900 + 100										113,60	1530X910X1150
	100 l	AdBlue®	**15**	12	26		19	Man.AD90	NO	-		
	900 l	Diesel	**60**	12	336	F1"-F1"	20	Aut.PA60	YES	40		
090-6901-012	Tank 900 + 100										114,00	1530X910X1150
	100 l	AdBlue®	**15**	12	26		19	Man.AD90	NO	-		

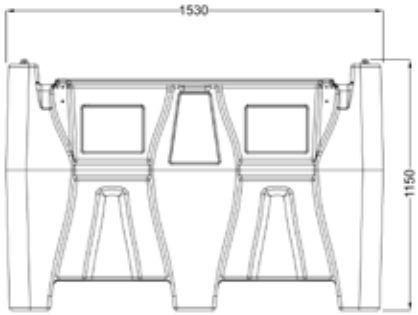

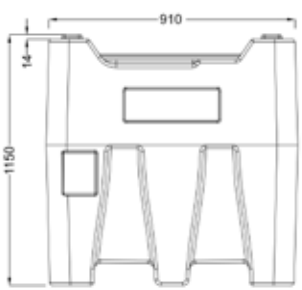

TANK FOR DIESEL TRANSPORT “Caddy”

Rigid polyethylene tank for diesel transport for private and professional use in total exemption for ADR (see ADR Regulation at page 180), perfect for refuelling of small operative vehicles, light-duty or recreational vehicles. It is equipped with run-flat wheels and suitable for moving on any ground. They have compact dimension for easy moving. Every tank can be filled vertically or horizontally, with the same fuel quantity. Provided with nozzle holder bracket, sphere relief valve with swiveling joint, filling plug with anti-spill vent valve.

“Caddy” series composed by:

Art. 090-6055-M00 Wheeled Caddy Tank 55 l diesel

Art. 090-6110-M00 Wheeled Caddy Tank 110 l diesel

Art. 027-3720-000 Alluminium manual rotary pump

Art. 908-0500-040 Antistatic rubber hose Ø 20 mm 4 m lenght

Art. 093-5200-000 Manual nozzle “MC 80” Flow rate 80 l/min

TANK FOR DIESEL TRANSPORT “Caddy”

55 l

110 l

Ref.	Descrip.	Flow rate for 100 revolutions		Width	Depth	Height	Nozzle	Weight	Packaging
		l	USG	mm	mm	mm		kg	mm
090-6055-M00	Caddy 55 l	**38**	10	460	360	900	Manual	8,00	1000X500X500
090-6110-M00	Caddy 110 l	**38**	10	460	440	1100	Manual	12,00	1200X500X500

DOUBLE-WALL TANK FOR DIESEL “Multitank”

Double-wall tanks in HDPE with integrated galvanised steel foil, palletised base. Equipped with level indicator, visual leaks detector, built-in transport handles. Tanks suitable for stocking of diesel, bio-diesel, for professional or private use. Approved for indoor installing and proper for filling with nozzles.

Hose reel, pump, nozzle and accessories are not included

Ref.	Descrip.	Capacity	Width	Depth	Height	Weight	Packaging
		l	mm	mm	mm	kg	mm
090-8070-000	Multitank	**700**	1135	757	1190	65	1135x757x1190
090-8100-000	Multitank	**1000**	1135	757	1590	80	1135x757x1590
090-8200-030	Supp.bracket	**-**	727	370	114	12,5	745x390x150

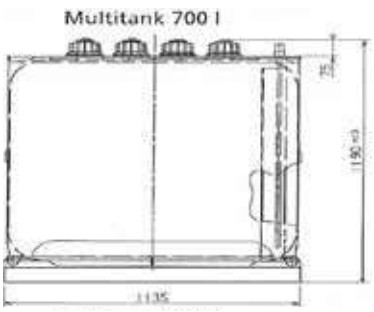

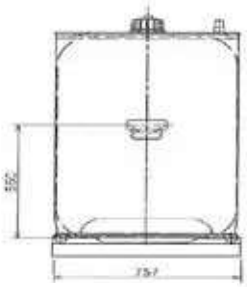

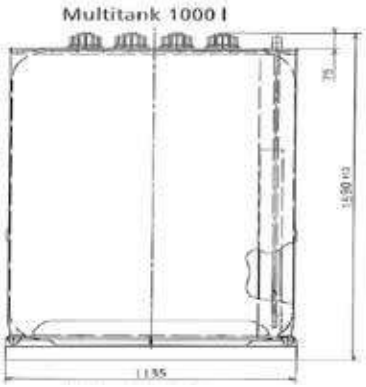

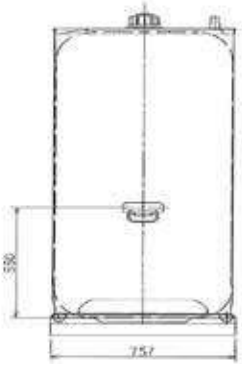

POLYETHYLENE TANK FOR DIESEL AND AdBlue® “Tank in tank”

Double-wall rigid polyethylene tank for diesel and AdBlue® for professional and private use, with built-in retention bucket, UV protection, anti-odor barrier SMP and seal of quality proofed barrier. Tank’s accessory: support to install the AdBlue® and diesel “Compact” kit.

Ref.	Descrip.	Flow rate	Width	Depth	Height	Weight	Packaging
		l	mm	mm	mm	kg	mm
090-9100-000	Tank in Tank	**1000**	1420	660	1685	59	1420x660x1685
090-9150-000	Tank in Tank	**1500**	1720	770	1720	90	1720x770x1720
090-9200-000	Tank in Tank	**2000**	2200	770	1700	145	2200x770x1700

097-9900-008	Supp.bracket	**x1000**	356	470	600	7	600x356x470
097-9900-009	Supp.bracket	**x1500**	356	285	600	6	600x356x285
097-9900-010	Supp.bracket	**x2000**	356	350	600	6,2	600x356x350

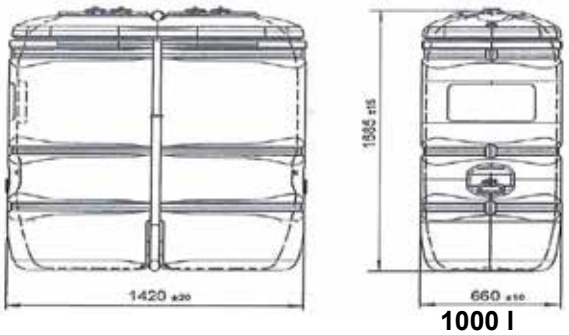

1000 l

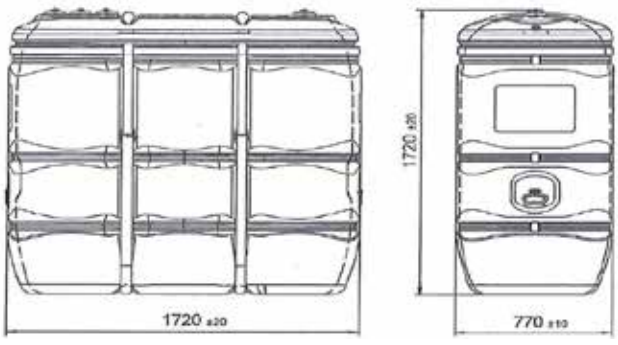

1500 l

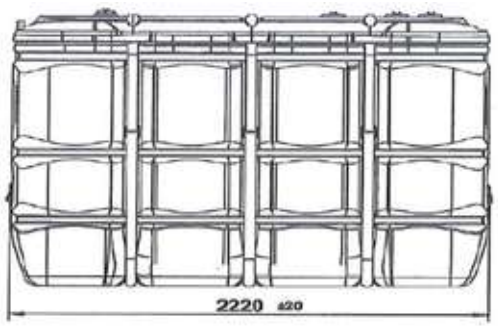

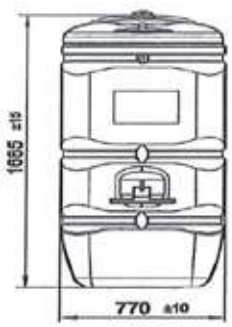

2000 l

Stainless steel support bracket

WHEELED FILTER GROUP FOR DIESEL “MecFilter”

Filter group with double filtering for oil and diesel absorbing water and impurities. The high efficiency allows the filtering of large quantity of diesel in a single operation. The first stage with filtering capacity equal to a 125 µ, second stage with filtering capacity equal to 30 µ with water separating. Group equipped with delivery hose and suction hose. Big diameter wheels suitable for moving on every ground, solid structure in painted tubular.

“MecFilter” series composed by:

Art. 091-5081-060 12V Pump - power cable (sec. 4 mmq, 4 m lenght) with pincers and fuse - 60 l/min

Art. 091-5095-060 Electric pump 230V 50Hz 60 l/min

Art. 091-5099-070 Electric pump 115V 60Hz 70 l/min

Art. 908-0516-040 Connection hose ø 20 mm M-M 1” 4 m lenght

Art. 095-5450-040 Suction kit with PVC hose

Art. 093-5200-000 Aluminium manual nozzle MC80 Flow rate 80 l/min

Art. 094-5250-030 Water separating delivery filter for diesel 30 µ - 70 l/min

Art. 094-5251-030 Cartridge for water separating delivery filter for diesel 30 µ

Art. 094-5255-125 Delivery filter with stainless steel cartridge for diesel 125 µ - 100 l/min

WHEELED FILTER GROUP FOR DIESEL “MecFilter”

Ref.	Descrip.	Flow rate	Voltage	Power	Conn. hose	Inlet-Outlet	Nozzle	Weight	Packaging
	MecFilter	l/min	AC V./Hz DC Volt	W	Ø mm / L m	BSPG		kg	mm

090-6000-230	Diesel Filter	**60**	230/50	460	20 / 4	F 1" - F 1"	Manual	45,00	530X520X1110
090-6000-115	Diesel Filter	**60**	115/60	575	20 / 4	F 1" - F 1"	Manual	46,00	530X520X1110
090-6000-012	Diesel Filter	**60**	12	336	20 / 4	F 1" - F 1"	Manual	45,00	530X520X1110

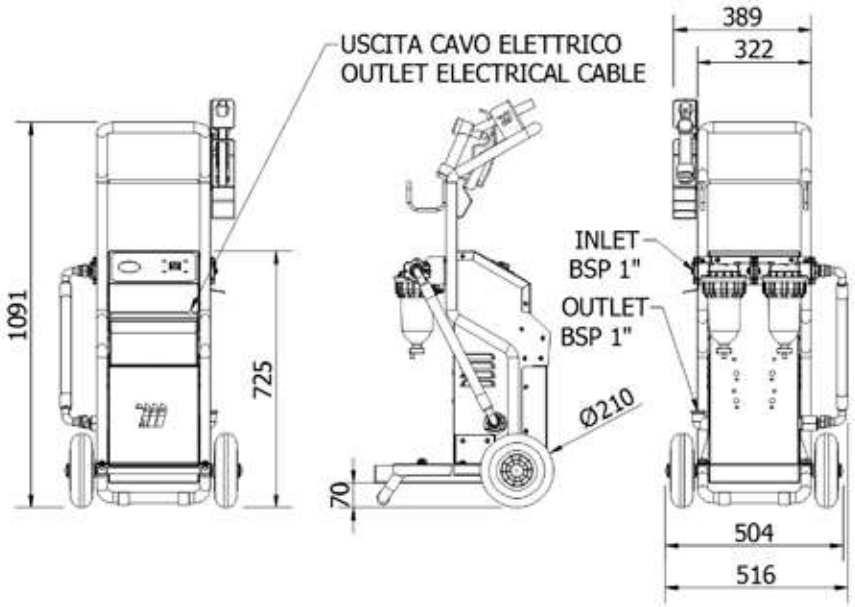

WHEELED FILTER GROUP FOR OIL / DIESEL “EcoFilter”

Filter group for oil and grease absorbing water and impurities. The high efficiency allows the filtering of large quantity of diesel in a single operation. Group equipped with delivery hose and suction hose. Big diameter wheels suitable for moving on every ground, solid structure in painted tubular.

“EcoFilter” series composed by:

Art. 091-5095-060 Electric pump for diesel 230V 50Hz 60 l/min

Art. 091-5099-070 Electric pump for diesel 115V 60Hz 70 l/min

Art. 091-5500-025 Electric pump for oils and lubricants 230V-50Hz 25 l/min

Art. 908-0516-040 Connection hose ø 20 mm M-M 1” 4 m lenght

Art. 095-5450-040 Suction kit with PVC hose

Art. 093-5200-000 Aluminium manual nozzle MC80 Flow rate 80 l/min

Art. 094-5240-000 Water separating delivery filter for diesel/oil 70 l/min

Art. 094-5280-010 Oil filter 100 l/min 10 µ - Connection F 1”

Art. 094-5281-010 Cartridge for oil filter 10 µ

WHEELED FILTER GROUP FOR OIL / DIESEL “EcoFilter”

090-6020-230

090-6021-230

Ref.	Descrip.	Flow rate	Voltage	Power	Conn. hose	Inlet-Outlet	Nozzle	Weight	Packaging
	EcoFilter	l/min	AC V./Hz DC Volt	W	Ø mm / L m	BSPG		kg	mm
090-6020-230	Diesel Filter	**60**	230/50	460	20 4m	F 1" - F 1"	Manual	24,00	990X350X405
090-6020-115	Diesel Filter	**70**	115/60	575	20 4m	F 1" - F 1"	Manual	25,00	990X350X405
090-6021-230	Oil Filter	**25**	230/50	850	20 4m	F 1" - F 1"	Manual	26,40	990X350X405

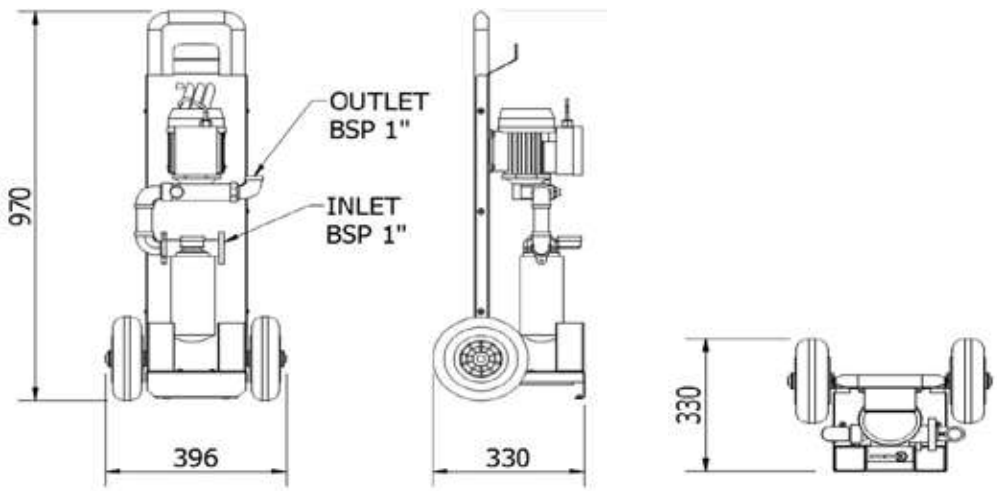

BATTERY ELECTRIC PUMPS FOR DIESEL FUEL TRANSFER

Battery electric vane self-priming pump 12 or 24V direct electricity, constitued by cast iron body, sintered steel impeller and acetyl resin vane. Built-in by-pass valve and stainless steel filter.

Battery electric pump 45 l for diesel transfer equipped with:

Power cable 2 m lenght sec. 2,5 mmq with pincers and fuse
Power cable 4 m lenght sec. 4 mmq with pincers and fuse
Self-priming rotary electric pump
Cast iron body
By-pass valve
DC engine
Stainless steel filter 100 micron
Motor protection rating IP55

Ref.	Flow rate	Voltage	Power	Electri-city	Cable lenght	Inlet-Outlet	Duty cycle	Max suction height	Wei-ght	Packaging
	l/min	DC Volt	W	A	m	BSPG	min	m	kg	mm
091-5080-045	**45**	12	264	18	2	F 1"-F 1"	40	3	5,10	250X195X210
091-5081-045	**45**	12	264	18	4	F 1"-F 1"	40	3	5,10	250X195X210
091-5082-045	**45**	24	312	10	2	F 1"-F 1"	40	3	5,10	250X195X210
091-5083-045	**45**	24	312	10	4	F 1"-F 1"	40	3	5,10	250X195X210

Dimensions:

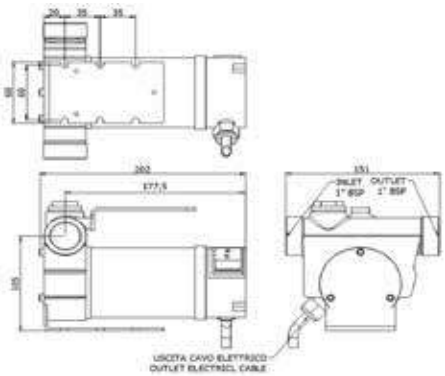

Battery electric vane self-priming pump 12 or 24V direct electricity, constitued by cast iron body, sintered steel impeller and acetyl resin vane. Built-in by-pass valve and stainless steel filter.

Battery electric pump 60 l for diesel transfer equipped with:

Power cable 4 m lenght sec. 4 mmq with pincers and fuse
Self-priming rotary electric pump
Cast iron body
By-pass valve
DC Engine
Stainless steel filter 100 micron
Motor protection rating IP55

Ref.	Flow rate	Voltage	Power	Electri-city	Cable lenght	Inlet-Outlet	Duty cycle	Max suction height	Wei-ght	Packaging
	l/min	DC Volt	W	A	m	BSPG	min	m	kg	mm
091-5081-060	**60**	12	336	19	4	F 1"-F 1"	40	3	6,70	250X195X210
091-5083-060	**60**	24	432	11	4	F 1"-F 1"	40	3	6,70	250X195X210

Dimensions:

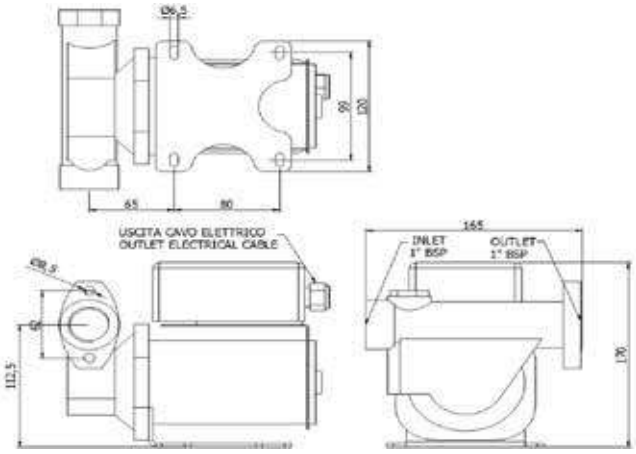

BATTERY ELECTRIC PUMPS FOR DIESEL FUEL TRANSFER

Battery electric vane self-priming pump 12 or 24V direct electricity, constitued by cast iron body, sintered steel impeller and acetyl resin vane. Built-in by-pass valve and stainless steel filter.

Battery electric pump 85 l for diesel transfer equipped with:

Power cable 4 m lenght sec. 6 mmq with pincers and fuse
Self-priming rotary electric pump
Cast iron body
By-pass valve
DC Engine
Stainless steel filter 100 micron
Motor protection rating IP55

Ref.	Flow rate	Voltage	Power	Electri-city	Cable Lenght	Inlet-Outlet	Duty cycle	Max suction height	Wei-ght	Packaging
	l/min	DC Volt	W	A	m	BSPG	min	m	kg	mm
091-5081-085	**85**	12	432	40	4	F 1"-F 1"	S2 30	2	9,50	300X215X230
091-5083-085	**85**	24	432	32	4	F 1"-F 1"	S2 30	2	9,50	300X215X230

Dimensions:

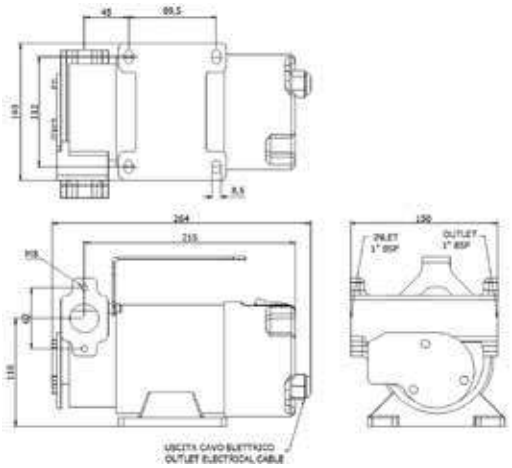

Electric pumps 230V, volumetric self-primig vane. They are equipped with asynchronous induction self-ventilated engine with motor protection rating IP55, insulaton class type F, internal protection. Built-in by-pass valve and stailess steel filter.

Electric pump for diesel fuel transfer 60 l
equipped with:

Power cable 2 m lenght, Schuko plug
Self-priming rotary electric pump
Cast iron body
By-pass valve
AC Engine
Stainless steel filter 100 micron
Motor protection rating IP55

Ref.	Flow rate	Voltage	Power	Electri-city	Lenght Cable	Inlet-outlet	Duty cycle	Weight	Packaging
	l/min	AC V./Hz	W	A	m	BSPG	min	kg	mm
091-5095-060	**60**	230/50	460	1,95	2	F 1"-F 1"	Contin.	7,60	250X195X210

Dimensions:

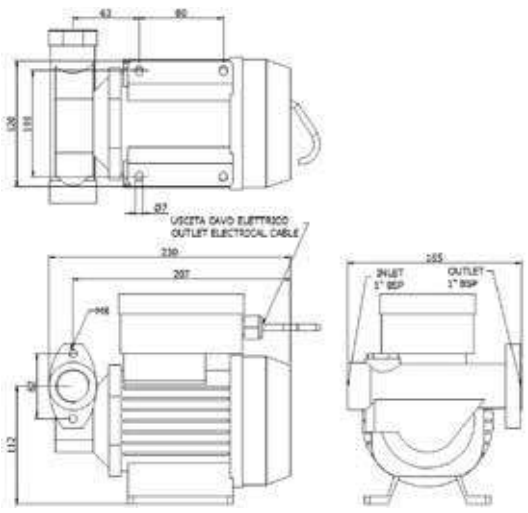

ELECTRIC PUMPS FOR DIESEL FUEL TRANSFER

Electric pumps 115 - 230V - 400V, volumetric self-primig vane. They are equipped with asynchronous induction self-ventilated with motor protection rating IP55, insulation class type F, internal protection. Built-in by-pass valve and stainless steel filter.

Electric pump 70 l for diesel fuel transfer equipped with:

Power cable 2 m lenght, Schuko plug
Self-priming rotary electric pump
Cast iron body
By-pass valve
AC Engine
Stainless steel filter 100 micron
Motor protection rating IP55

Ref.	Flow rate	Voltage	Power	Electricty	Cable lenght	Inlet-outlet	Duty cycle	Weight	Packaging
	l/min	AC V./Hz	W	A	m	BSPG	min	kg	mm
091-5098-070	**70**	230/50	552	2,9	2	F 1"-F 1"	Contin.	8,60	300X215X230
091-5099-070	**70**	115/60	575	6	2	F 1"-F 1"	Contin.	8,60	300X215X230
091-5097-070	**70**	400/50	304	1,1	2	F 1"-F 1"	Contin.	9,00	300X215X230

Dimensions:

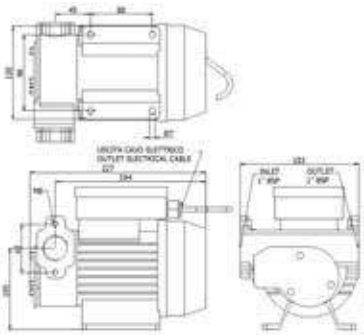

Electric pump 115 o 230V, volumetric self-primig vane. They are equipped with asynchronous induction self-ventilated engine with motor protection rating IP55, insulaton class type F, internal protection. Built-in by-pass valve and stailess steel filter.

Electric pump 100 l for diesel fuel transfer equipped with:

Power cable 2 m lenght, Schuko plug
Self-priming rotary electric pump
Cast iron body
By-pass valve
AC engine
Stainless steel filter 100 micron
Motor protection rating IP55

Ref.	Flow rate	Voltage	Power	Electri-city	Cable lenght	Inlet-outlet	Duty cycle	Weight	Packaging
	l/min	AC V./Hz	W	A	m	BSPG	min	kg	mm
091-5100-100	**100**	230/50	805	4,5	2	F 1"-F 1"	Contin.	14,00	300X215X230
091-5101-100	**100**	115/60	977	8,5	2	F 1"-F 1"	Contin.	14,00	300X215X230

Dimensions:

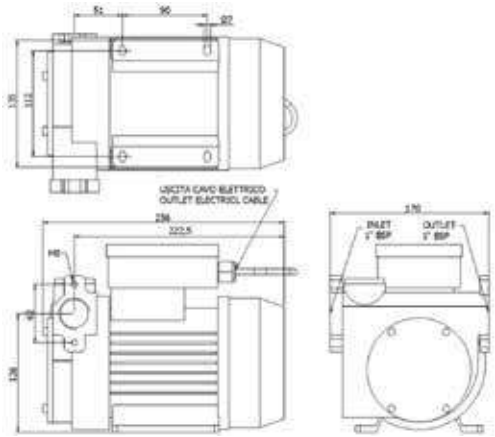

Electric pumps 230V, volumetric self-primig vane. They are equipped with asynchronous induction self-ventilated with motor rate protection IP55, insulation class type F, internal protection. Built-in by-pass valve and stainless steel filter.

Electric pump 150 l for diesel fuel transfer equipped with:

Power cable 2 m lenght, Schuko plug
Self-priming rotary electric pump
Cast iron body
By-pass valve
AC Engine
Stainless steel filter 100 micron
Motor protection rating IP55

Ref.	Flow rate	Voltage	Power	Electri-city	Cable leght	Inlet-Outlet	Duty cycle	Weight	Packaging
	l/min	AC V./Hz	W	A	m	BSPG	min	kg	mm
091-5100-150	**150**	230/50	1725	14,5	2	F 1"- F 1"	S2 30 min	16,70	290X190X250

Dimensions:

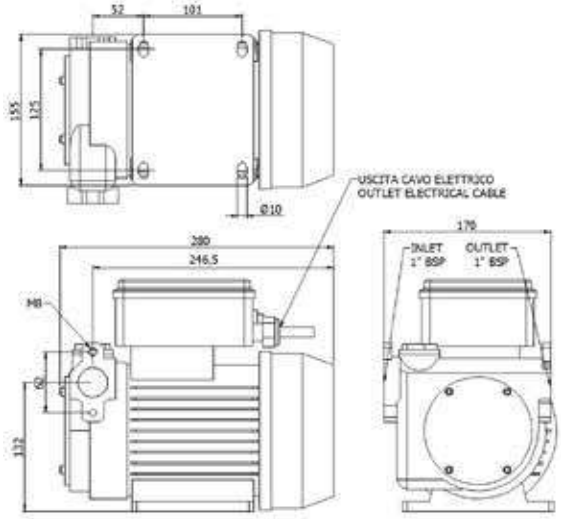

ELECTRIC PUMPS FOR DIESEL FUEL TRANSFER “CarbuMec”

Electric pumps “CarbuMec” available in 4 versions: 230V, 110V, 12V, 24V. They are composed by plastic body and anti-siphon security system. In case of accidental damage of the delivery hose or of the delivery nozzle, the anti-siphon security system provides for avoiding the liquid’s spread in the workig space for sipho-effect.

Electric pump 35/40 l for diesel fuel transfer equipped with:

Plastic telescopic suction hose M1”
Plastic body
Protection rate IPx4
Switch ON/OFF
Versions 12V and 24V equipped with pincers and batteries
Pump body thread M64x2 and 2”

Ref.	Flow rate	Voltage	Power	Electri-city	Cable lenght	Duty cycle	Max suction height	Weight	Packaging
	l/min	AC V./Hz DC Volt	W	A	m	min	m	kg	mm
091-5600-040	**40**	230/50	224	1,23	3	Contin.	3	2,70	410X400X270
091-5602-040	**40**	115/60	320	3,64	3	Contin.	3	2,70	410X400X270
091-5610-035	**35**	12	110	6,32	3	Contin.	3	2,70	410X400X270
091-5612-035	**35**	24	135	3,70	3	Contin.	3	2,70	410X400X270

Dimensions:

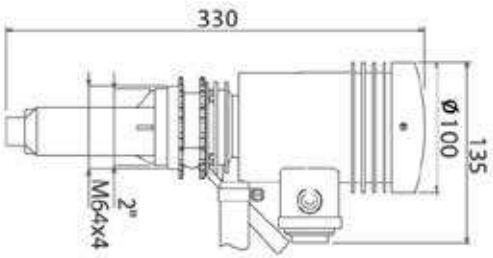

ELECTRIC PUMPS FOR OIL TRANSFER “VISCOMEC”

12V-24V DC electric pumps with gear rotor for the transfer of oils and lubricants with viscosity up to 600cSt (oil SAE 80W90).

They are suitable for applications where it is necessary to transfer oil from drums.

Art. 091-5480-010
Electric pump for oils and lubricants transfer
12V 10l/min operating pressure 4-6 bar

Power cable 2 m lenght, with pincers and protection fuse
Self-priming rotary electric pump
Cast iron body
Sintered steel gears
By-pass valve
DC Engine
Motor protection rating IP55

Art. 091-5482-010
Electric pump for oils and lubricants transfer
24V 10l/min operating pressure 4-6 bar

Power cable 2 m lenght, with pincers and protection fuse
Self-priming rotary electric pump
Cast iron body
Sintered steel gears
By-pass valve
DC Engine
Motor protection rating IP55

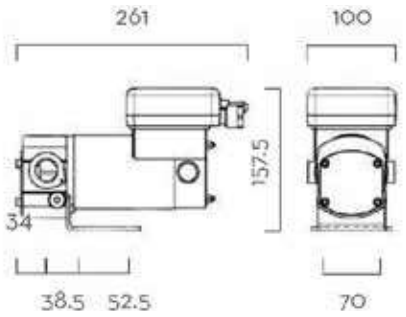

Volumetric electric pumps and 230V for oils and lubricants transfer, the suction filter is supplied.

Art. 091-5500-030
Electric pump for oils and lubricants 230V-50Hz 30 l/min

Power cable 2 m lenght, Schuko plug
Self-priming rotary electric pump
Cast iron body
By-pass valve
AC Engine
Stainless steel filter100 micron
Motor protection rating IP55

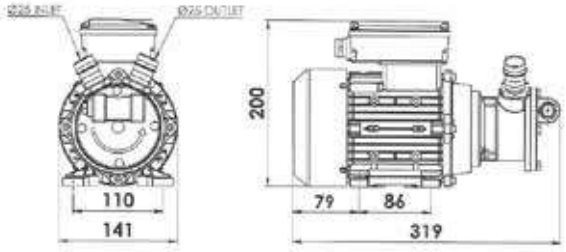

Ref.	Flow rate	Voltage	Power	Electri-city	Cable leght	Inlet-outlet	RPM	Weight	Packaging
	l/min	AC V./Hz DC Volt	W	A	m	BSPG	min	kg	mm
091-5480-010	**10**	12	300	35	2	F 3/4" BSP	2900	4,90	345X175X255
091-5482-010	**10**	24	300	18	2	F 3/4" BSP	2900	4,90	345X175X255
091-5500-030	**30**	230/50	850	3	2	F 1" BSP	1800	10	390X190X250

230V AC self-priming volumetric vane electric pumps for oils and lubricants transfer with viscosity up to 500 cSt. They are equipped with asynchronous self-ventilated induction electric engine with IP55 protection, F type insulation class, thermal protection. Integrated and adjustable by-pass valve to grant the functioning also when you don't press the nozzle's trigger. Noise inferior to 70 dB.

Art. 091-5500-025
Electric pump for lubricants transfer of 230V-50HZ 25 l/min

Art. 091-5500-050
Electric pump for lubricants transfer of 25 l/min - 50 l/min

Supply cable L. 2 mt, with Schuko plug
Rotative self-priming electric pump
Cast iron body By-pass valve
AC engine Max pressure 6 bar
Level of engine protection

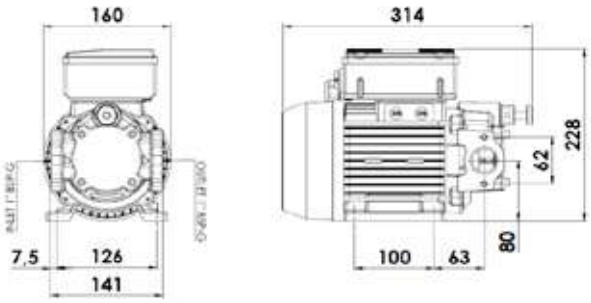

Ref.	Flow rate	Voltage	Power	Electri-city	Cable length	Inlet Outlet	Duty cycle	Weight	Packaging
	l/min	AC V./Hz	W	A	m	BSPG	min	kg	mm
091-5500-025	**25**	230/50	828	4,6	2	F 1"-F 1"	contin.	14,10	390X190X250
091-5500-050	**50**	230/50	1081	7	2	F 1"-F 1"	contin.	14,10	390X190X250

Art. 091-6000-000
Universal support plate with handle, suitable for 230V / 115V pumps:

Pump not included

Ref.	Description	Dimensions	Weight	Packaging
		width x depth x height (mm)	kg	mm
091-6000-000	Support plate with handle	234x320x370	4,00	245x335x110

MECHANICAL VOLUMETRIC FLOW METERS

Mechanical volumetric flow meter able to provide high degree of precision for the measurament of diesel for private use. Equipped with a totalizer and a partial meter, resettable with side knob, allowing the user to change the output direction of the fuel as needed. The meters are also fitted with regulation screws for precision adjustment. The flow meter can be applied to motor pumps or for gravity.

Art. 092-5103-000 Mechanical volumetric flow meter 3C
min-max flow rate 20-120 l/min

6 digits totalizer
3 digits partal totalizer (max 999 l)
Allowed fluids: diesel, light oil

Art. 092-5104-000 Mechanical volumetric flow meter 4C
min-max flow rate 20-120 l/min

8 digits totalizer
4 digits partal totalizer (max 9999 l)
Allowed fluids: diesel, light oil

Art. 092-5104-G00 Mechanical volumetric flow meter for gallons 4C
min-max flow rate 5-32 g/min

8 digits totalizer
4 digits partal totalizer (max 9999 g)
Allowed fluids: diesel, light oil

Ref.	Flow rate	Pressure	Accuracy	Inlet - Outlet	Weight	Packaging
	l/min	bar	%	BSPG	Kg	mm
092-5103-000	**20-120 l/min**	10	+/- 1	F 1" - F 1"	2	220X150X220
092-5104-000	**20-120 l/min**	10	+/- 1	F 1" - F 1"	2	220X150X220
092-5104-G00	**5-32 Gallons**	10	+/- 1	F 1" - F 1"	2	220X150X220

DIGITAL VOLUMETRIC FLOW METERS

Digital flow meter with swinging disc system. It is used for the diesel measurement for private use. The flow meter works through the liquid's passage in to the measurement chamber, the liquid makes the swinging disc moving through special transmission system, it produces a magnetic signal read by the electronic device. It is possible to rotate the dial to facilitate the reading in every assembly position of the device. Flow meter of easy assembly, it can be installed on rigid and flexibles pipes, tanks, pumps and for gravity.

Art. 092-5110-000 Digital volumetric flow meter
min-max flow rate 5-120 l/min

6 digits totalizer
6 digits partal totalizer
Allowed fluids: diesel, light oil
Measurement unit: L (liters), G (U.S. gallons),
Q (Quarters), P (Pints)

Art. 092-5111-000 Digital volumetric flow meter with cable
min-max flow meter 5-120 l/min

6 digits totalizer
6 digits partal totalizer
Allowed fluids: diesel, light oil
Measurement unit: L (liters), G (U.S. gallons),
Q (Quarters), P (Pints)

Ref.	Flow rate	Pressure	Accuracy	Inlet - Outlet	Weight	Packaging
	l/min	bar	%	BSPG	Kg	mm
092-5110-000	**5-120**	3,5	+/- 0,5	F 1" - F 1"	1,43	200X170X115
092-5111-000	**5-120**	3,5	+/- 0,3	F 1" - F 1"	1,45	200X170X115

DIGITAL FLOW METERS

Turbine or with gears flow meters that feature high precision performance for the measurement of non-commercial use diesel. The software enables full control of dispensing system thank to the various functions featured. It can be applied on motor pumps or for gravity.

Art. 092-5124-000 Digital turbine flow meter MEC 24
min-max flow rate 7/120 l/min

6 digits totalizer (non resettable)
6 digits partial (resettable)
Allowed fluids: diesel, low viscosity oil

Art. 092-5130-000 Digital flow meter with gears MGE-110
min-max flow rate 5-110 l/min

6 digits totalizer (non resettable)
6 digits partial (resettable)
Allowed fluids: diesel, oil

Art. 092-5140-000 Digital flow meter with gears MGE-250
min-max flow rate 10-250 l/min

6 digits totalizer (non resettable)
6 digits partial (resettable)
Allowed fluids: diesel, oil

Art. 092-5150-000 Digital flow meter with gears MGE-400
min-max flow rate 15-400 l/min

6 digits totalizer (non resettable)
6 digits partial (resettable)
Allowed fluids: diesel, oil

Ref.	Flow rate	Pressure	Accuracy	Inlet-outlet	Weight	Packaging
	l/min	bar	%	BSPG	Kg	mm
092-5124-000	**7-120**	10	+/- 1	F 1" - F 1"	0,4	145X135X85
092-5130-000	**5-110**	50	+/- 0,5	F 1" - F 1"	1	150X140X85
092-5140-000	**10-250**	50	+/- 0,5	F 1.1/2" - F 1.1/2"	2,7	180X175X165
092-5150-000	**15-400**	50	+/- 0,5	F 2" - F 2"	4,3	193X145X141

Electronic pulsed volumetric flow meters that offer high precision performance for diesel measurement for private use.

Art. 092-5170-110 Mechanical pulsed flow meter MGI-110
min-max flow rate5-110 l/min
nr. 41 pulses/liter

Art. 092-5170-250 Mechanical pulsed flow meter MGI-250
min-max flow rate 10-250 l/min
nr. 11 pulses/liter

Art. 092-5170-400 Mechanical pulsed flow meter MGI-400
min-max flow rate 15-400 l/min
nr. 5,5 pulses/liter

Ref.	Flow rate	Pressure	Accuracy	Inlet- Outlet	Weight	Packaging
	l/min	bar	%	BSPG	Kg	mm
092-5170-110	**5-110**	50	+/- 0,5	F 1" - F 1"	1,1	123X90X123
092-5170-250	**10-250**	50	+/- 0,5	F 1.1/2" - F 1.1/2"	2,3	159X100X141
092-5170-400	**15-400**	50	+/- 0,5	F 2" - F 2"	4,3	193X145X141

ACCESSORIES FOR ELECTRONIC CONTROL UNIT

Electronic control unit that offers high precision performance for the diesel measurement and delivery for private use.

Art. 092-5200-230 Electronic control unit MecGest 110/230V 50Hz
Software included
Preselection and multi-users consumption management

Art. 092-5220-000 Codified communication kit USB key reader for PC

Art. 092-5300-000 Red key - Manager - nr. 1 pc.

Art. 092-5300-001 Blue key - User - nr. 1 pc.

Art. 092-5300-010 Kit blue keys - Users- nr. 10 pc.

Art. 092-5350-001 Codified Kit Lan Connection USB-RS485

Art. 092-5402-100 Shielded signal cable 2 poles 100 m lenght

MANUAL DISPENSING NOZZLES FOR DIESEL TRANSFER

Manual dispensing nozzles made up of plastic and aluminium body, equipped with swivel connection. For their features, they can be applied on every transfer system, also operating for gravity.

Art. 093-5199-000 Manual plastic nozzle "MP120"
for diesel fuel transfer
Flow rate 120 l/min
Plastic body
Swivel connection F 1"

Art. 093-5200-000 Manual nozzle "MC80"
for diesel fuel transfer
Flow rate 80 l/min
Aluminium body
Swivel connection F 1"

Art. 093-5202-000 Aluminium manual nozzle "MC100"
for diesel fuel transfer
Flow rate 100 l/min
Aluminium body with plastic lever
Swivel connection F 1"

Ref.	Model	Fluid	Flow rate	Inlet	Weight	Ø End	Packaging
		tipo	l/min	BSPG	Kg	mm	mm
093-5199-000	MP120	Diesel	**120**	F 1"	0,5	29,00	400X175X57
093-5200-000	MC80	Diesel	**80**	F 1"	0,85	24,00	400X175X57
093-5202-000	MC100	Diesel	**100**	F 1"	0,75	25,00	400X175X57

AUTOMATIC DISPENSING NOZZLE FOR DIESEL TRANSFER

Automatic dispensing nozzles composed by aluminium body. Equipped with a device that shuts off the flow automatically when the tank is full. Suitable for quick and safe refuel, provided with swive-connection.

Art. 093-5210-000 Automatic nozzle "PA60"
for diesel fuel transfer
Flow rate 70 l/min
Aluminium body
Swivel connection F 1"

Art. 093-5215-000 Automatic nozzle "PA90"
for diesel fuel transfer
Flow rate 90 l/min
Aluminium body
Swivel connection F 1"

Art. 093-5220-000 Automatic nozzle "PA120"
for diesel fuel transfer
Flow rate 120 l/min
Aluminium body
Swivel connection F 1"

Ref.	Model	Fluid	Flow rate	Inlet	Weight	Ø End	Packaging
		tipo	l/min	BSPG	Kg	mm	mm
093-5210-000	PA60	Diesel	**70**	F 1"	1,3	24,00	400X175X57
093-5215-000	PA90	Diesel	**90**	F 1"	1,65	27,00	400X175X57
093-5220-000	PA120	Diesel	**120**	F 1"	1,69	30,00	400X175X57

AUTOMATIC DISPENSING NOZZLE FOR DIESEL

Automatic dispensing nozzles composed by aluminium body. Equipped with a device that shuts off the flow automatically when the tank is full. Suitable for quick and safe refuel, provided with swivel connection.

Art. 093-5221-080 Automatic nozzle "ZVA80"
for diesel fuel transfer
Flow rate 80 l/min
Aluminium body
Swivel connection F 1"

Art. 093-5221-120 Automatic nozzle "ZVA120"
for diesel fuel transfer
Flow rate 120 l/min
Aluminium body
Swivel connection F 1"

Art. 093-5222-280 Automatic nozzle "PA280"
for diesel fuel transfer
Flow rate 280 l/min
Aluminium body
Swivel connection F 1.1/2"

Ref.	Model	Fluid	Flow rate	Inlet	Weight	Ø End	Packaging
		tipo	l/min	BSPG	Kg	mm	mm
093-5221-080	ZVA80	Diesel	**80**	F 1"	1,20	24,80	400X175X57
093-5221-120	ZVA120	Diesel	**120**	F 1"	1,65	31,00	400X175X57
093-5222-280	PA280	Diesel	**280**	F 1.1/2"	2,20	39,50	420x220x573

ACCESSORIES FOR AUTOMATIC DISPENSING DIESEL NOZZLES

Art. 093-5310-003 Cover for Automatic nozzle PA60 - Blue
Art. 093-5312-003 Cover for Automatic nozzle PA90/120 - Blue

Art. 093-5310-004 Cover for Automatic nozzle PA60 - Yellow
Art. 093-5312-004 Cover for Automatic nozzle PA90/120 - Yellow

Art. 093-5310-007 Cover for Automatic nozzle PA60 - Red
Art. 093-5312-007 Cover for Automatic nozzle PA90/120 - Red

Art. 093-5310-008 Cover for Automatic nozzle PA60 - Green
Art. 093-5312-008 Cover for Automatic nozzle PA90/120 - Green

Art. 093-5224-506 Swiveling connector M 3/4” - F 1”

Art. 093-5224-606 Swiveling connector M 1” - F 1”

Art. 093-5224-808 Swiveling connector M 1.1/2” - F 1.1/2”

Ref.	Model	Fluid	Flow rate	Inlet	Weight	Packaging
		Type	l/min	BSPG	Kg	mm
093-5224-506	PA60	Diesel	70	M 3/4” - F 1"	0,3	50x50x60
093-5224-606	PA90/120	Diesel	120	M 1” - F 1"	0,4	50x50x60
093-5224-808	PA280	Diesel	280	M 1.1/2” - F 1.1/2”	0,8	70x70x80

WATER SEPARATING DELIVERY FILTERS

Water separating cartridge filter. The engines use the diesel delivered by the station, so the filter ensures their protection. It separates and absorbes the water in the delivered diesel.

Art. 094-5240-000 Water separating delivery filter for diesel/gasoline 70 l/min
Inlet-outlet connetion F1”
Filtering capacity **30 µ**

Art. 094-5241-000 Water separating cartridge diesel gasoline for filter 70 l/mmin
Dimensions 213x96 mm
Filtering capacity **30 µ**

Art. 094-5245-000 Water separating delivery filter for diesel/gasoline 150 l/min
Inlet-outlet connetion F1”
Filtering capacity **30 µ**

Art. 094-5246-000 Water separating cartridge diesel gasoline for filter 150 l/min
Dimensions 269x128 mm
Filtering capacity **30 µ**

Art. 094-5248-000 Water separating transparent delivery filter for diesel/gasoline 105 l/min
Inlet-outlet connection F1”
Filtering capacity **5 µ**

Art. 094-5249-000 Water separating cartridge diesel gasoline for filter 105 l/min
Dimensions 100x210 mm
Filtering capacity **5 µ**

Art. 094-5249-025 Water separating cartridge diesel gasoline for filter 105 l/min
Dimensions 100x210 mm
Filtering capacity **25 µ**

Ref.	Filter capacity	Fluid	Flow rate	Inlet	Weight	Packaging
	µ	type	l/min	BSPG	Kg	mm
094-5240-000	30	Diesel	**70**	F 1" - F 1"	1,4	200X225X135
094-5241-000	30	Diesel	**70**	-	0,75	112X112X213
094-5245-000	30	Diesel	**150**	F 1" - F 1"	2,55	170X170X355
094-5246-000	30	Diesel	**150**	-	1,7	170X170X355
094-5248-000	5	Diesel	**105**	F 1" - F 1"	2,8	225X185X325
094-5249-000	5	Diesel	**105**	-	1,5	170X170X213
094-5249-025	25	Diesel	**105**	-	1,5	170X170X213

WATER SEPARATING DELIVERY FILTERS

Water separating cartridge filter. The engines use the diesel delivered by the station, so the filter ensures their protection. It separates and absorbes the water in the delivered diesel.

Art. 094-5250-030

Art. 094-5250-005

Art. 094-5255-125

Art. 094-5250-030 Water separating delivery filter for diesel 70 l/min 30 µ
Inlet-outlet connection F1”

Art. 094-5251-030 Water separating cartridge diesel for filter 70 l/min
dimensions 75x138 mm
filtering capacity **30 µ**

Art. 094-5250-005 Impurities filter for diesel 70 l/min 5 µ
Inlet-outlet connection F1”

Art. 094-5251-005 Impurities paper cartridge for filter 70 l/min
dimensions 75x138 mm
filtering capacity **5 µ**

Art. 094-5255-125 Delivery filter with stainless steel cartridge for diesel 100 l/min
Inlet-outlet connection F1”
filtering capacity **125 µ**

Art. 094-5256-125 Stainless steel cartridge for diesel filter 100 l/min
dimensions 75x110 mm
filtering capacity **125 µ**

Art. 094-5300-060 Headboard filter holder
Flow rate 60/70 l/min

Art. 094-5300-100 Headboard filter holder
Flow rate 100/150 l/min

Ref.	Fluid	Flow rate	Filtering capacity	Inlet	Weight	Packaging
	type	l/min		BSPG	Kg	mm
094-5250-005	Diesel	**70**	5	F 1” - F 1”	1,50	300X180X150
094-5250-030	Diesel	**70**	30	F 1” - F 1”	1,50	300X180X150
094-5251-005	Diesel	**70**	5	-	0,50	100X100X150
094-5251-030	Diesel	**70**	30	-	0,50	100X100X150
094-5255-125	Diesel	**100**	125	F 1” - F 1”	1,50	300X180X150
094-5256-125	Diesel	**100**	125	-	0,75	100X100X150
094-5300-060	Diesel	**60/70**	-	F 1" - F 1"	0,60	200X170X115
094-5300-100	Diesel	**100/150**	-	F 1" - F 1"	0,85	200X170X115

SUCTION HOSE KITS FOR DIESEL

Art. 095-5284-000 Telescopic suction tube with foot valve
495<885 mm lenght
Inlet BSP-G M 1”

Art. 095-5430-020 Suction kit with PVC hose
Spiral PVC hose, Ø 25 2 m lenght
Plastic filter F1” with rubber holder Ø 25
Screw clamps 25x37

Art. 095-5440-020 Suction kit with PVC hose
Spiral PVC hose, Ø 25 2 m lenght
Plastic foot valve F1” with filter
Rubber holder Ø 25 - M 1”
Screw clamps 25x37

Art. 095-5440-040 Suction kit with PVC hose
Spiral PVC hose, Ø 25 4 m lenght
Plastic foot valve F1” with filter
Rubber holder Ø 25 - M 1”
Screw clamps 25x37

Art. 095-5450-020 Suction kit with PVC hose
Spiral PVC hose, Ø 25 2 m lenght
Brass foot valve F1” with stainless steel filter
Rubber holder Ø 25 - M 1”
Screw clamps 25x37

Art. 095-5450-040 Suction kit with PVC hose
Spiral PVC hose, Ø 25 4 m lenght
Brass foot valve F1” with stainless steel filter
Rubber holder Ø 25 - M 1”
Screw clamps 25x37

Art. 912-0600-500 Spiral PVC hose Ø25X35 50 m lenght

Ref.	Hose lenght	Dimensions	Inlet-outlet	Weight
	m	mm	BSPG	Kg
095-5285-000	604<1020 mm	25X37	F 1" - F 1"	1,1
095-5430-020	2	25X35	F 1" - F 1"	0,8
095-5440-020	2	25X35	F 1" - F 1"	1,0
095-5440-040	4	25X35	F 1" - F 1"	1,5
095-5450-020	2	25X35	F 1" - F 1"	1,1
095-5450-040	4	25X35	F 1" - F 1"	1,6
912-0600-500	50	25x35	Ø25	11,5

ANTISTATIC RUBBER HOSES FOR DIESEL

Antistatic rubber hose 10 bar with connections

Ref.	Hose Lenght	Ø hose	Dimensions	Inlet-outlet	Weight	Packaging
	m	G	mm	BSPG	Kg	mm
908-0516-020	2	3/4"	19x27	M 1" - M 1"	1,1	400X400X100
908-0516-040	4	3/4"	19x27	M 1" - M 1"	1,9	400X400X100
908-0516-060	6	3/4"	19x27	M 1" - M 1"	2,6	400X400X100
908-0516-100	10	3/4"	19x27	M 1" - M 1"	4,2	400X400X150
908-0506-100	10	3/4"	19x27	F 1" - M 1"	4,2	400X400X150
908-0506-150	15	3/4"	19x27	F 1" - M 1"	6,2	400X400X200
908-0506-200	20	3/4"	19x27	F 1" - M 1"	8,2	400X400X200
908-0506-300	30	3/4"	19x27	F 1" - M 1"	12,2	400X400X250
908-0506-400	40	3/4"	19x27	F 1" - M 1"	16,2	400X400X250

Antistatic rubber hose 10 bar with connections

Ref.	Hose lenght	Ø hose	Dimensions	Inlet-outlet	Weight	Packaging
	m	G	mm	BSPG	Kg	mm
908-0616-020	2	1"	25X35	M 1" - M 1"	1,5	400X400X100
908-0616-040	4	1"	25X35	M 1" - M 1"	2,8	400X400X150
908-0616-060	6	1"	25X35	M 1" - M 1"	4,2	400X400X150
908-0616-100	10	1"	25X35	M 1" - M 1"	6,8	500X500X200
908-0606-100	10	1"	25X35	F 1" - M 1"	6,8	500X500X200
908-0606-150	15	1"	25X35	F 1" - M 1"	10,1	500X500X200
908-0606-200	20	1"	25X35	F 1" - M 1"	13,4	500X500X200
908-0606-300	30	1"	25X35	F 1" - M 1"	20	500X500X200

Antistatic rubber hose 10 bar

Ref.	Hose lenght	Ø hose	Dimensions	Inlet-outlet	Weight	Packaging
	m	G	mm	BSPG	Kg	mm
908-0500-600	60	3/4"	19X27	-	24	-
908-0600-500	50	1"	25X35	-	33	-

Art. 099-6030-025 Plastic filter with rubber holder Ø 25

Art. 099-6020-006 Plastic foot valve with filter F 1”

Art. R35-0200-006 Brass foot valve F 1” with stainless steel filter

Art. R34-0100-006 Stainless steel filter M 1”

Art. R18-0855-206 Brass rubber holder M 1” x 20 mm

Art. R18-0855-256 Brass rubber holder M 1” x 25 mm

Art. R18-1211-006 L shaped elbow 90° F-F1”
chromed brass

Art. R18-1210-006 L shaped elbow 90° M-F1”
chromed brass

Art. R18-0302-606 Cylindrical nipple 1” x 1”

Art. R18-0302-605 Cylindrical nipple 1” x 3/4”

Art. R18-0502-605 Exagonal bushing M 1” - F 3/4”

Art. 095-5280-609 Quick coupling for pump fixing M 1” - M 2”

Art. F90-1000-030 Aluminium elbow flange 90° F-F 1” with O-ring

Art. F90-1010-006 Aluminium flange 1” d.80 with O-ring

Art. F90-6690-606 Swiveling joint M 1” / F 1”

FIXED VARNISHED HOSE REELS FOR DIESEL 10 bar

The automatic varnished steel hose reels with spring are suitable to hold flexible hoses for diesel delivery. They allow to unroll only the necessary hose lenght, improving their functionality.

Equipped with:

Antististatic black rubber hose 10 bar
Galvanized connections
Galvanized swilveling joint 90°
Viton seals

F-460

Ref.	Flow rate	Hose lenght	Ø hose	Inlet-Outlet
	l/min	m	G	
070-1308-500	80	**without hose**	-	F3/4"G-M1"G
070-1308-508	80	**8**	3/4"	F3/4"G-M1"G

F-550

Ref.	Flow rate	Hose lenght	Ø hose	Inlet-Outlet
	l/min	m	G	
070-1408-600	95	**without hose**	-	F1"G - M1"G
070-1408-510	85	**10**	3/4"	F1"G - M1"G
070-1408-515	85	**15**	3/4"	F1"G - M1"G
070-1408-610	93	**10**	1"	F1"G - M1"G

F-555

Ref.	Flow rate	Hose lenght	Ø hose	Inlet-Outlet
	l/min	m	G	
070-1508-600	95	**without hose**	-	F1"G - M1"G
070-1508-520	83	**20**	3/4"	F1"G - M1"G
070-1508-615	90	**15**	1"	F1"G - M1"G

F-560

Ref.	Flow rate	Hose lenght	Ø hose	Inlet-Outlet
	l/min	m	G	
070-1608-600	95	**without hose**	-	F1"G - M1"G
070-1608-530	80	**30**	3/4"	F1"G - M1"G
070-1608-540	75	**40**	3/4"	F1"G - M1"G
070-1608-620	87	**20**	1"	F1"G - M1"G
070-1608-630	85	**30**	1"	F1"G - M1"G

SWIVELLING VARNISHED HOSE REELS FOR DIESEL 10 bar

The automatic varnished steel hose reels with spring are suitable to hold flexible hoses for diesel delivery. They allow to unroll only the necessary hose lenght, improving their functionality. The rewinding of the hose is fast and safe and it allows to have a free and tidy work place, with ready-to- use equipment, ensuring high safety to workers.

S-460

Ref.	Flow rate	Hose lenght	Ø hose	Inlet-Outlet
	l/min	m	G	
071-1308-500	80	**without hose**	-	F3/4"G-M1"G
071-1308-508	80	**8**	3/4"	F3/4"G-M1"G

S-550

Ref.	Flow rate	Hose lenght	Ø hose	Inlet-Outlet
	l/min	m	G	
071-1408-600	95	**without hose**	-	F1"G - M1"G
071-1408-510	85	**10**	3/4"	F1"G - M1"G
071-1408-515	85	**15**	3/4"	F1"G - M1"G
071-1408-610	93	**10**	1"	F1"G - M1"G

S-555

Ref.	Flow rate	Hose lenght	Ø hose	Inlet-Outlet
	l/min	m	G	
071-1508-600	95	**without hose**	-	F1"G - M1"G
071-1508-520	83	**20**	3/4"	F1"G - M1"G
071-1508-615	90	**15**	1"	F1"G - M1"G

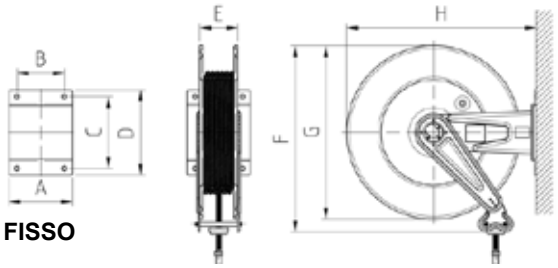

FISSO

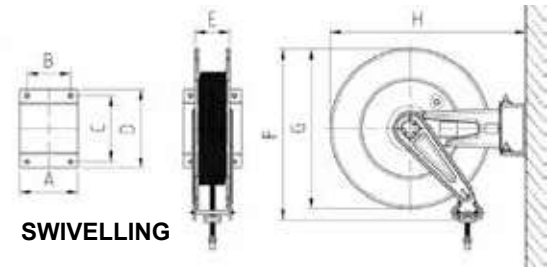

SWIVELLING

OVERALL DIMENSIONS

Mod.	A	B	C	D	E	F	G	H	Kg	Packaging (mm)
F-460	158	120	168	192	95	480	460	500	16,50<19,50	595X265X605
F-550	200	150	225	270	120	590	550	600	22,00<45,00	655X315X700
F-555	250	200	225	270	170	590	550	600	26,00<53,00	655X365X700
F-560	440	390	225	270	360	590	550	600	33,00<83,00	655X555X700
S-460	150	120	168	196	95	480	460	575	17,50<24,00	595X265X605
S-550	200	150	225	270	120	590	550	680	23,00<45,00	655X315X700
S-555	250	200	225	270	170	590	550	680	27,00<54,00	655X365X700

FIXED STAINLESS STEEL HOSE REELS FOR DIESEL 10 bar

The automatic stainless steel AISI 304 hose reels with spring are suitable to hold flexible hoses for diesel delivery. They allow to unroll only the necessary hose lenght, improving their functionality.

Equipped with:

Antistatic black rubber hose 10 bar
Stainless steel connection
Stainless steel swivellin joint 90° AISI 316
Viton seals

FX-460

Ref.	Flow rate	Hose lenght	Ø hose	Inlet-Outlet
	l/min	m	G	
070-2308-500	80	**without hose**	-	F3/4"G-M1"G
070-2308-508	80	**8**	3/4"	F3/4"G-M1"G

FX-550

Ref.	Flow rate	Hose lenght	Ø hose	Inlet-Outlet
	l/min	m	G	
070-2408-600	95	**without hose**	-	F1"G - M1"G
070-2408-510	85	**10**	3/4"	F1"G - M1"G
070-2408-515	85	**15**	3/4"	F1"G - M1"G
070-2408-610	93	**10**	1"	F1"G - M1"G

FX-555

Ref.	Flow rate	Hose lenght	Ø hose	Inlet-Outlet
	l/min	m	G	
070-2508-600	95	**without hose**	-	F1"G - M1"G
070-2508-520	83	**20**	3/4"	F1"G - M1"G
070-2508-615	90	**15**	1"	F1"G - M1"G

FX-560

Ref.	Flow rate	Hose lenght	Ø hose	Inlet-Outlet
	l/min	m	G	
070-2608-600	95	**without hose**	-	F1"G - M1"G
070-2608-530	80	**30**	3/4"	F1"G - M1"G
070-2608-540	75	**40**	3/4"	F1"G - M1"G
070-2608-620	87	**20**	1"	F1"G - M1"G
070-2608-630	85	**30**	1"	F1"G - M1"G

SWIVELLING STAINLESS STEEL HOSE REELS FOR DIESEL 10 bar

The automatic stainless steel AISI 304 hose reels with spring are suitable to hold flexible hoses for diesel delivery. They allow to unroll only the necessary hose lenght, improving their functionality. The rewinding of the hose is fast and safe and it allows to have a tidy and free work place, with ready-to-use equipment, ensuring high safety to workers.

SX-460

Ref.	Flow rate	Hose lenght	Ø hose	Inlet-Outlet
	l/min	m	G	
071-2308-500	80	**without hose**	-	F3/4"G-M1"G
071-2308-508	80	**8**	3/4"	F3/4"G-M1"G

SX-550

Ref.	Flow rate	Hose lenght	Ø hose	Inlet-Outlet
	l/min	m	G	
071-2408-600	95	**without hose**	-	F1"G - M1"G
071-2408-510	85	**10**	3/4"	F1"G - M1"G
071-2408-515	85	**15**	3/4"	F1"G - M1"G
071-2408-610	93	**10**	1"	F1"G - M1"G

SX-555

Ref.	Flow rate	Hose lenght	Ø hose	Inlet-Outlet
	l/min	m	G	
071-2508-600	95	**without hose**	-	F1"G - M1"G
071-2508-520	83	**20**	3/4"	F1"G - M1"G
071-2508-615	90	**15**	1"	F1"G - M1"G

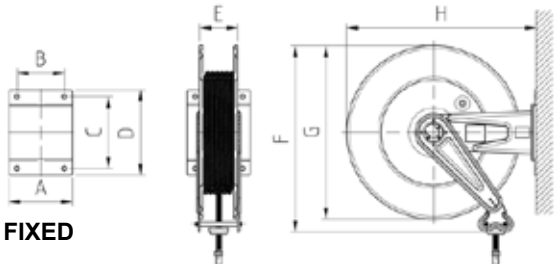

FIXED

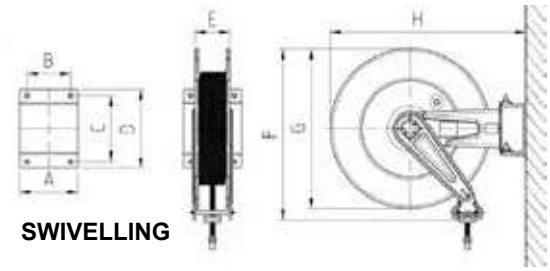

SWIVELLING

OVERALL DIMENSIONS

Mod.	A	B	C	D	E	F	G	H	Kg	Packaging (mm)
FX-460	158	120	168	192	95	480	460	500	16,5<19,5	595X265X605
FX-550	200	150	225	270	120	590	550	600	22<45	655X315X700
FX-555	250	200	225	270	170	590	550	600	26<53	655X365X700
FX-560	440	390	225	270	360	590	550	600	33<83	655X555X700
SX-460	150	120	168	196	95	480	460	575	17,5<24	595X265X605
SX-550	200	150	225	270	120	590	550	680	23<45	655X315X700
SX-555	250	200	225	270	170	590	550	680	27<54	655X365X700

JERRY CANS FOR FUEL TRANSFER

Steel cans made of cold-laminated steel 0,7mm and 0,8mm, treated to prevent rusting, suitable for fuel and lubricants transfer, external covering standard green color RAL 9007.

Art. 096-3905-000 Painted jerry can 5 l
Colur green RAL 9007
Certified UN-LNE-CE
Quantity per box: 8 pcs

Art. 096-3910-000 Painted steel jerry can 10 l
Colour green RAL 9007
Certified UN-LNE-CE
Quantity per box: 5 pcs

Art. 096-3920-000 Painted steel jerry can 20 l
Colour green 9007
Certified UN-LNE-CE
Quantity per box: 4 pcs

Art. 096-3922-000 Rigid transfer filler with filter
For jerry cans of 5, 10, 20 l

Art. 096-3923-000 Rigid transfer filler with filter
For jerry cans of 5, 10, 20 l

Ref.	Capacity	Quantity for box	Weight	Packaging
	l	Pz.	Kg	mm
096-3905-000	**5**	8	1,6	590X500X290
096-3910-000	**10**	5	3	850X360X290
096-3920-000	**20**	4	3,8	690X350X480
096-3922-000	-	1	0,25	-
096-3923-000	-	1	0,19	-

Suitable for the distribution of the fuel, lubricants and gasoline. They are pre-arranged to be applied directly to the pump tank.

Art. 027-1325-000 Oil and diesel fuel transfer pump
Delivery capacity 0,30 l/stroke
Telescopic shank for 30/220 l barrels

Art. 027-1330-000 Oil and diesel fuel transfer pump
Delivery capacity 0,30 l/stroke
Telescopic shank for 30/220 l barrels

Art. 027-3705-000 Aluminium rotary barrel pump
Delivery capacity 0,27 l/revolution
Shank for 30/220 l barrels
Suitable for diesel, lubricants and gasoline transfer

Art. 027-3710-000 Aluminium rotary barrel pump H.D.
Delivery capacity 80 l/min
With suction hose and 2" adaptor
for the connection to the barrels
Delivery hose 1,80 m lenght
Suitable for diesel, lubricants and gasoline transfer

Ref.	Fluid	Flow rate	Weight	Packaging
	type	l/min	kg	mm
027-1325-000	Diesel	**0,30 stroke**	2,37	500X160X70
027-1330-000	Diesel	**0,30 stroke**	2,24	300X150X100
027-3705-000	Diesel, gasoline and lubricants	**0,27revolution**	1,87	157X180X365
027-3710-000	Diesel, gasoline and lubricants	**80 l/min**	5,5	310X195X225

HS360M3A

Kit for fuel transfer from barrels and tank under directives ATEX/IECEx, with electric vane pumps 12V - 230V. Composed by metal telescopic suction hose, quick coupling 2” with filter for the connction with the barrel and the nozzle holder bracket to ease the distributor use.

“Benz Kit” series composed by:

Art. 091-5800-050 Electric pump 230V 50Hz 50 l/min ATEX
Power cable 2 m lenght, Schuko plug

Art. 091-5801-050 Electric pump 12V 50 l/min ATEX
Power cable 2 m lenght, with pincers and protection fuse

Art. 918-0500-040 Antistatic connection rubber hose
EN 12115 ATEX D.19x31 4 m lenght

Art. 095-5284-000 Telescopic suction hose with foot valve
M 1” 495<885 mm lenght

Art. 093-5204-150 Manual nozzle SELF3000 Flow rate 150 l/min

Art. 093-5321-080 Automatic nozzle ZVA80 Flow rate 80 l/min

Art. 093-5300-000 Nozzle holder bracket

Art. 095-5280-609 Quick coupling for pump fixing M 1” - M 2”

KIT ELECTRIC PUMPS FOR GASOLINE TRANSFER “Benz Kit”

Ref.	Descrip.	Flow rate	Voltage	Power	Inlet-Outlet	Conn. hose	Nozzle	Duty cycle	Wei-ght	Packaging
		l/min	AC V./Hz DC Volt	W	BSPG	Ø		ON/OFF min	kg	mm
090-5600-050	Benz Kit	**50**	230/50	250	F1" - F1"	20	Manual	30/30	14,00	410X400X320
090-5600-Y50	Benz Kit	**50**	12	250	F1" - F1"	20	Manual	30/60	14,00	410X400X320
090-5601-050	Benz Kit	**50**	230/50	250	F1" - F1"	20	Aut.ZVA80	30/30	14,50	410X400X320
090-5601-Y50	Benz Kit	**50**	12	250	F1" - F1"	20	Aut.ZVA80	30/60	14,50	410X400X320

KIT ELECTRIC PUMPS FOR GASOLINE TRANSFER “Benz Kit”

Kit for fuel transfer from barrels and tanks under directives ATEX/IECEx, with electric vane pumps 12V - 230V. Composed by metal telescopic suction hose, quick coupling 2” with filter for the connection with the barrel and the nozzle holder bracket to ease the distributor use.

“Benz Kit” series composed by:

Art. 091-5800-050 Electric pump 230V 50Hz 50 l/min ATEX
Power cable 2 m lenght, Schuko plug

Art. 091-5801-050 Electric pump 12V 50 l/min ATEX
Power cable 2 m lenght, with pincers and protection fuse

Art. 918-0500-040 Antistatic connection rubber hose
EN 12115 ATEX D.19x31 4 m lenght

Art. 095-5284-000 Telescopic suction hose with foot valve
M 1” 495<885 mm lenght

Art. 093-5204-150 Manual nozzle SELF3000 Flow rate 150 l/min

Art. 093-5321-080 Automatic nozzle ZVA80 Flow rate 80 l/min

Art. 094-5240-000 Water separating delivery filter for gasoline 70 l/min

Art. 093-5300-000 Nozzle holder bracket

Art. 095-5280-609 Quick coupling for pump fixing M 1” - M 2”

KIT ELECTRIC PUMPS FOR GASOLINE TRANSFER “Benz Kit”

Ref.	Descrip.	Flow rate	Voltage	Power	Inlet-Outlet	Conn. hose	Nozzle	Duty cycle	Wei-ght	Packaging
		l/min	AC V./Hz DC Volt	W	BSPG	Ø		ON/OFF min	kg	mm
090-5602-050	Benz Kit	**50**	230/50	250	F1" - F1"	20	Manual	30/30	15,00	410X400X320
090-5602-Y50	Benz Kit	**50**	12	250	F1" - F1"	20	Manual	30/60	15,00	410X400X320
090-5603-050	Benz Kit	**50**	230/50	250	F1" - F1"	20	Aut.ZVA80	30/30	15,50	410X400X320
090-5603-Y50	Benz Kit	**50**	12	250	F1" - F1"	20	Aut.ZVA80	30/60	15,50	410X400X320

KIT ELECTRIC PUMPS FOR GASOLINE TRANSFER “Benz Kit”

Kit for fuel transfer from barrels and tansk under directives ATEX/IECEx, with electric vane pumps 12V - 230V. Composed by metal telescopic suction hose, quick coupling 2” with filter for the connction with the barrel and the nozzle holder bracket to ease the distributor use.

“Benz Kit” series composed by:

Art. 091-5800-050 Electric pump 230V 50Hz 50 l/min ATEX
Power cable 2 m lenght, Schuko plug

Art. 091-5801-050 Electric pump12V 50 l/min ATEX
Power cable 2 m lenght, with pincers and protection fuse

Art. 918-0500-040 Antistatic connection rubber hose
EN 12115 ATEX D.19x31 4 m lenght

Art. 095-5284-000 Telescopic suction hose with foot valve
M 1” 495<885 mm lenght

Art. 092-5160-000 Mechanical flow meter for gasoline Atex
min-max Flow rate 20-120 l/min

Art. 093-5204-150 Manual nozzle SELF3000 Flow rate 150 l/min

Art. 093-5321-080 Automatic nozzle ZVA80 Flow rate 80 l/min

Art. 094-5240-000 Water separating delivery filter for gasoline 70 l/min

Art. 093-5300-000 Nozzle holder bracket

Art. 095-5280-609 Quick coupling for pump fixing M 1” - M 2”

KIT ELECTRIC PUMPS FOR GASOLINE TRANSFER “Benz Kit”

Ref.	Descrip.	Flow rate	Voltage	Power	Inlet-Outlet	Conn. hose	Nozzle	Flow meter	Duty cycle	Wei-ght	Packaging
		l/min	AC V./Hz DC Volt	W	BSPG	Ø			ON/OFF min	kg	mm
090-5604-050	Benz Kit	**50**	230/50	250	F1" - F1"	20	Manual	YES	30/30	17,00	550X400X320
090-5604-Y50	Benz Kit	**50**	12	250	F1" - F1"	20	Manual	YES	30/60	17,00	550X400X320
090-5605-050	Benz Kit	**50**	230/50	250	F1" - F1"	20	Aut.ZVA80	YES	30/30	17,50	550X400X320
090-5605-Y50	Benz Kit	**50**	12	250	F1" - F1"	20	Aut.ZVA80	YES	30/60	17,50	550X400X320

POLYETHYLENE TANK FOR GASOLINE TRANSPORT “Benz-Tank”

Rigid polyethylene tank for gasoline transport for private use in total ADR exemption (see ADR Regulations at page 180) . Aluminium filling plug with built-in safety valve, in-line filter for suction, transfer group, automatic lockable nozzle. Equipped with volumetric pump ATEX version, earthing cable with pincer, cables 4 m lenght for the connection to the battery and 4 m lenght flexible hose for fuel. Reinforced and lockable lid.

“Benz-Tank” series composed by:

Art. 090-7220-000 Tank 220 l without pumps

Art. 091-5801-050 Electric pump 12V 50 l/min ATEX
Power cable 2 m lenght, with pincers and protection fuse

Art. 092-5161-000 Digital flow meter for gasoline Atex
min-max Flow rate 7-120 l/min

Art. 918-0500-040 Antistatic connection rubber hose
EN 12115 ATEX D.19x31 4 m lenght

Art. 093-5321-080 Automatic nozzle ZVA80 Flow rate 80 l/min

POLYETHYLENE TANK FOR GASOLINE TRANSPORT “Benz-Tank”

Ref.	Descrip.	Flow rate	Voltage	Power	Inlet-outlet	Conn. hose	Nozzle	Flow meter	Duty cycle	Wei-ght	Packaging
		l/min	AC V./Hz DC Volt	W	BSPG	Ø			min	Kg	mm
090-7220-012	Benz-Tank	**50**	12	250	F1" - F1"	19	Aut. ZVA80	NO	30/60	24,00	910X600X665
090-7221-012	Benz-Tank	**50**	12	250	F1" - F1"	19	Aut. ZVA80	YES	30/60	24,30	910X600X665

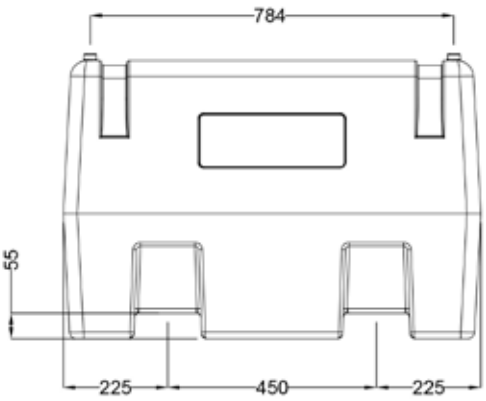

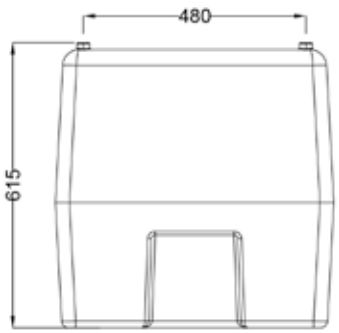

TANK FOR GASOLINE TRANSPORT “Caddy”

Rigid polyethylene tank for gasoline transport for private and professional in total exemption ADR (see ADR Regulations at page 180), perfect for refuelling of small operative vehicles, light-duty or recreational vehicles. It is equipped with run-flat wheels and suitable for moving on any ground. They have compact dimension for easy moving. Every box can be filled vertically or horizontally, with the same fuel quantity. Provided with nozzle holder bracket, sphere relief valve with swiveling joint, filling plug with anti-spill vent valve.

“Caddy” series composed by:

Art. 090-7055-M00 Wheeled Caddy tank 55 l gasoline

Art. 027-3720-000 Aluminium manual rotary pump

Art. 908-0500-040 Antistatic rubber hose Ø 20 mm 4 m lenght

Art. 093-5204-150 Automatic nozzle SELF3000 Flow rate 150 l/min

TANK FOR GASOLINE TRANSPORT “Caddy”

55 l

Ref.	Descrip.	Capacity for 100 revolutions		Width	Depth	Height	Nozzle	Weight	Packaging
		l	USG	mm	mm	mm		kg	mm
090-7055-M00	Caddy 55 l	**38**	10	460	360	900	Manual	9,00	1000X500X500

Electric pumps 12V e 230V suitable for per inflammable fuel transfer such as gasoline, kerosene and diesel, with internal protection integrated in the winding. The electric pumps for gasoline transfer fulfill the standards of ATEX / IECEx directives regarding the use of materials in potentially explosive atmospheres (see ATEX Regulations at page 179).

Art. 091-5800-050
Electric pump Atex for gasoline transfer
230V-50Hz Flow rate 50l/min

Power cable 2 m lenght, Schuko plug
Cast iron body
High efficiency engine with reduced absorption
Suppressor (electromagnetic compatibility EMC)
Built-in by-pass valve
Thermic protection

Art. 091-5801-050
Electric pump Atex for gasoline transfer
12V Flow rate 50l/min

Power cable 2 m lenght, with pincers and protection fuse
Cas iron body
High efficiency engine with reduced absorption
Suppressor (electromagnetic compatibility EMC)
Built-in by-pass valve
Thermic protection

Ref.	Flow rate	Voltage	Power	Electri-city	Power cable lenght	Inlet-Out-let	Duty cycle	Wei-ght	Packaging
	l/min	AC V./Hz DC Volt	W	A	m	BSPG	ON/OFF min	kg	mm
091-5800-050	**50**	230/50	250	1,2	2	F 1"-F 1"	30/30	8,80	390X195X260
091-5801-050	**50**	12	250	21	2	F 1"-F 1"	30/60	8,80	390X195X260

Flow meter for private use for the measurement of dispensed quantity of gasoline, kerosene and diesel. The articles fulfill the the standards ATEX / IECEx directives regarding the use of materials in potentially explosive atmospheres (see ATEX Regulations at page 179). Available in mechanical and digital version.

Art. 092-5160-000 Mechanical flow meter for gasoline Atex min-max Flow rate 20-120 l/min

6 digits totalizer
3 digits partial totalizer
Allowed fluids: Gasoline
Measurement unit: l (liters), G (U.S. gallons), Q (Quarters), P (Pints)

Art. 092-5161-000 Digital flow meter Atex min-max Flow rate 7-120 l/min

6 digits totalizer
5 digits partial totalizer
Allowed fluids: Gasoline, diesel, kerosene
Measurement unit: l (liters), G (U.S. gallons), Q (Quarters), P (Pints)

Art. 093-5204-150 Manual nozzle SELF3000 150 l for gasoline transfer

Flow rate150 l/min
Plastic body with aluminium ends
Swiveling joint F 1”

Art. 093-5321-080 Automatic nozzle ZVA80 for gasoline transfer

Flow rate 80 l/min
Aluminium body
Swiveling joint F 1”

Ref.	Flow rate	Pressure	Accuracy	Inlet-outlet	Weight	Packaging
	l/min	bar	%	BSPG	Kg	mm
092-5160-000	**20-120**	3,5	+/- 1	F 1" - F 1"	2,15	240X190X190
092-5161-000	**7-120**	20	+/- 1	M 1" - F 1"	0,6	115X160X135

Ref.	Model	Fluid	Flow rate	Inlet	Weight	Ø End	Packaging
		type	l/min	BSPG	Kg	mm	mm
093-5204-150	SELF3000	Gasoline	**150**	F 1"	1,00	20,00	400X175X57
093-5321-080	ZVA80	Gasoline	**80**	F 1"	1,20	20,50	400X175X57

AdBlue®

GAIA
AdBlue®
MECLUBE

ELECTRIC AdBlue® KIT FOR IBC

Electric diaphragm self-priming kit pump for AdBlue® for filling vehicles from the IBC tanks. The stainless steel support bracket allows the kit's fixing to the safety metal grid.

"Kit AdBlue® IBC" series composed by:

Art. 098-6500-230 Diaphragm electric pump for AdBlue® 230V 50 Hz 40 l/min cable 2 m lenght

Art. 098-6500-115 Diaphragm electric pump for AdBlue® 115V 60 Hz 40 l/min cable 2 m lenght

Art. 098-6500-012 Diaphragm electric pump for AdBlue® 12V 34 l/min cable 4 m lenght with pincers

Art. 099-6600-000 Suction connections SEC

Art. 099-6010-000 External suction connections for IBC S60X6

Art. 909-0500-060 Antistatic rubber hose EPDM 20 bar G 3/4" 6 m lenght (19x29)

Art. 911-0500-011 PVC spiral suction hose d.20x25 1,1 m lenght

Art. 099-6500-000 Suction hose with plug he2" BSP SEC connection

Art. 099-5199-000 Manual plastic nozzle "AD90" Flow rate 90 l/min

Art. 099-5205-000 Automatic plastic nozzle with stainless steel end "AP80" 80 l/min

OPTIONAL:

Art. 099-5240-020 AdBlue® filter 20µ 60 l/min

ELECTRIC AdBlue® KIT FOR IBC

SEC

S60x6

Ref.	Descrip.	Flow rate	Voltage	Power	Inlet-outlet	Conn. hose	Nozzle	Adaptor	Wei-ght	Packaging
		l/min	AC V./ Hz DC Volt	W	BSPG	Ø			kg	mm
097-5500-230	Kit AdBlue	**40**	230/50	350	3/4"-3/4"	19X29	Man.AD90	SEC	14,20	550X400X320
097-5501-230	Kit AdBlue	**40**	230/50	350	3/4"-3/4"	19X29	Aut.AP80	SEC	16,20	550X400X320
097-5510-230	Kit AdBlue	**40**	230/50	350	3/4"-3/4"	19X29	Man.AD90	S60X6	14,20	550X400X320
097-5511-230	Kit AdBlue	**40**	230/50	350	3/4"-3/4"	19X29	Aut.AP80	S60X6	16,20	550X400X320
097-5500-115	Kit AdBlue	**40**	115/60	350	3/4"-3/4"	19X29	Man.AD90	SEC	14,20	550X400X320
097-5501-115	Kit AdBlue	**40**	115/60	350	3/4"-3/4"	19X29	Aut.AP80	SEC	16,20	550X400X320
097-5510-115	Kit AdBlue	**40**	115/60	350	3/4"-3/4"	19X29	Man.AD90	S60X6	14,20	550X400X320
097-5511-115	Kit AdBlue	**40**	115/60	350	3/4"-3/4"	19X29	Aut.AP80	S60X6	16,20	550X400X320
097-5500-012	Kit AdBlue	**34**	12	200	3/4"-3/4"	19X29	Man.AD90	SEC	12,70	550X400X320
097-5501-012	Kit AdBlue	**34**	12	200	3/4"-3/4"	19X29	Aut.AP80	SEC	14,70	550X400X320
097-5510-012	Kit AdBlue	**34**	12	200	3/4"-3/4"	19X29	Man.AD90	S60X6	12,70	550X400X320
097-5511-012	Kit AdBlue	**34**	12	200	3/4"-3/4"	19X29	Aut.AP80	S60X6	14,70	550X400X320

PUMP DUTY CYCLE min: S2 20

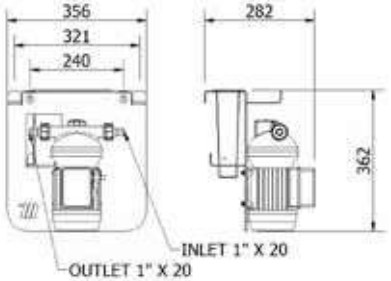

ELECTRIC AdBlue® KIT FOR IBC

Electric diaphragm self-priming kit pump for AdBlue® for filling vehicles from the IBC tanks. The stainless steel support bracket allows the kit's fixing to the safety metal grid.

"Kit AdBlue® IBC" series composed by:

Art. 098-6500-230 Diaphragm electric pump for Adblue® 230V 50 Hz 40 l/min cable 2 m lenght

Art. 098-6500-115 Diaphragm electric pump for AdBlue® 115V 60 Hz 40 l/min cable 2 m lenght

Art. 098-6500-012 Diaphragm electric pump for AdBlue® 12V 34 l/min cable 4 m lenght with pincers

Art. 099-5124-000 Digital flow meter MEC 24 min-max flow rate 5-120 l/min.

Art. 099-6600-000 Suction connections SEC

Art. 099-6010-000 External suction connections for IBC S60X6

Art. 909-0500-060 Antistatic rubber hose EPDM 20 bar G 3/4" 6 m lenght (19x29)

Art. 911-0500-011 PVC spiral suction hose d.20x25 1,1 m lenght

Art. 099-6500-000 Suction hose 2" BSP SEC connection

Art. 099-5199-000 Manual plastic nozzle "AD90" Flow rate 90 l/min

Art. 099-5205-000 Automatic plastic nozzle with stainless steel end "AP80" 80 l/min

OPTIONAL:

Art. 099-5240-020 AdBlue® filter 20µ 60 l/min

ELECTRIC AdBlue® KIT FOR IBC

SEC

S60x6

Ref.	Descrip.	Flow rate	Voltage	Power	Inlet-outlet	Conn. hose	Nozzle	Adaptor	Flow meter	Wei-ght	Packaging
		l/min	AC V./ Hz DC Volt	W	BSPG	Ø				kg	mm
097-5600-230	Kit AdBlue	**40**	230/50	350	3/4"-3/4"	19X29	Man.AD90	SEC	YES	14,70	550X400X320
097-5601-230	Kit AdBlue	**40**	230/50	350	3/4"-3/4"	19X29	Aut.AP80	SEC	YES	16,70	550X400X320
097-5610-230	Kit AdBlue	**40**	230/50	350	3/4"-3/4"	19X29	Man.AD90	S60X6	YES	14,70	550X400X320
097-5611-230	Kit AdBlue	**40**	230/50	350	3/4"-3/4"	19X29	Aut.AP80	S60X6	YES	16,70	550X400X320
097-5600-115	Kit AdBlue	**40**	115/60	350	3/4"-3/4"	19X29	Man.AD90	SEC	YES	14,70	550X400X320
097-5601-115	Kit AdBlue	**40**	115/60	350	3/4"-3/4"	19X29	Aut.AP80	SEC	YES	16,70	550X400X320
097-5610-115	Kit AdBlue	**40**	115/60	350	3/4"-3/4"	19X29	Man.AD90	S60X6	YES	14,70	550X400X320
097-5611-115	Kit AdBlue	**40**	115/60	350	3/4"-3/4"	19X29	Aut.AP80	S60X6	YES	16,70	550X400X320
097-5600-012	Kit AdBlue	**34**	12	200	3/4"-3/4"	19X29	Man.AD90	SEC	YES	13,20	550X400X320
097-5601-012	Kit AdBlue	**34**	12	200	3/4"-3/4"	19X29	Aut.AP80	SEC	YES	15,20	550X400X320
097-5610-012	Kit AdBlue	**34**	12	200	3/4"-3/4"	19X29	Man.AD90	S60X6	YES	13,20	550X400X320
097-5611-012	Kit AdBlue	**34**	12	200	3/4"-3/4"	19X29	Aut.AP80	S60X6	YES	15,20	550X400X320

PUMP DUTY CYCLE min: S2 20

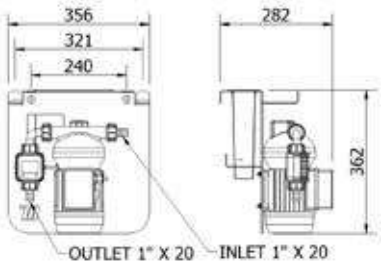

ELECTRIC AdBlue® KIT FOR IBC

Electric diaphragm self-priming kit pump for AdBlue® for filling vehicles from the IBC tanks. The stainless steel support bracket allows the kit's fixing to the safety metal grid.

"Kit AdBlue® IBC" series composed by:

Art. 098-6500-230 Diaphragm electric pump for Adblue® 230V 50 Hz 40 l/min cable 2 m lenght

Art. 098-6500-115 Diaphragm electric pump for AdBlue® 115V 60 Hz 40 l/min cable 2 m lenght

Art. 098-6500-012 Diaphragm electric pump for AdBlue® 12V 34 l/min cable 4 m lenght with pincers

Art. 099-5124-000 Digital flow meter MEC 24 min-max flow rate 5-120 l/min.

Art. 099-6600-000 Suction connections SEC

Art. 099-6010-000 External suction connections for IBC S60X6

Art. 909-0500-060 Antistatic rubber hose EPDM 20 bar G 3/4" 6 m lenght (19x29)

Art. 911-0500-011 PVC spiral suction hose d.20x25 1,1 m lenght

Art. 099-6500-000 Suction hose 2" BSP SEC connection

Art. 099-5199-000 Manual plastic nozzle "AD90" Flow rate 90 l/min

Art. 099-5205-000 Automatic plastic nozzle with stainless steel end "AP80" 80 l/min

Art. 099-5240-020 AdBlue® filter 20µ 60 l/min

ELECTRIC AdBlue® KIT FOR IBC

SEC

S60x6

Ref.	Descrip.	Flow rate	Voltage	Power	Inlet-outlet	Conn. hose	Nozzle	Adaptor	Flow meter	Wei-ght	Packaging
		l/min	AC V./ Hz DC Volt	W	BSPG	Ø				kg	mm
097-5620-230	Kit AdBlue	**40**	230/50	350	3/4"-3/4"	19X29	Man.AD90	SEC	YES	15,60	550X400X320
097-5621-230	Kit AdBlue	**40**	230/50	350	3/4"-3/4"	19X29	Aut.AP80	SEC	YES	17,60	550X400X320
097-5630-230	Kit AdBlue	**40**	230/50	350	3/4"-3/4"	19X29	Man.AD90	S60X6	YES	15,60	550X400X320
097-5631-230	Kit AdBlue	**40**	230/50	350	3/4"-3/4"	19X29	Aut.AP80	S60X6	YES	17,60	550X400X320
097-5620-115	Kit AdBlue	**40**	115/60	350	3/4"-3/4"	19X29	Man.AD90	SEC	YES	15,60	550X400X320
097-5621-115	Kit AdBlue	**40**	115/60	350	3/4"-3/4"	19X29	Aut.AP80	SEC	YES	17,60	550X400X320
097-5630-115	Kit AdBlue	**40**	115/60	350	3/4"-3/4"	19X29	Man.AD90	S60X6	YES	15,60	550X400X320
097-5631-115	Kit AdBlue	**40**	115/60	350	3/4"-3/4"	19X29	Aut.AP80	S60X6	YES	17,60	550X400X320
097-5620-012	Kit AdBlue	**34**	12	200	3/4"-3/4"	19X29	Man.AD90	SEC	YES	14,10	550X400X320
097-5621-012	Kit AdBlue	**34**	12	200	3/4"-3/4"	19X29	Aut.AP80	SEC	YES	16,10	550X400X320
097-5630-012	Kit AdBlue	**34**	12	200	3/4"-3/4"	19X29	Man.AD90	S60X6	YES	14,10	550X400X320
097-5631-012	Kit AdBlue	**34**	12	200	3/4"-3/4"	19X29	Aut.AP80	S60X6	YES	16,10	550X400X320

PUMP WORKING CYCLE min: S2 20

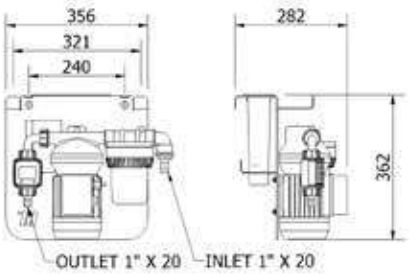

ELECTRIC PUMPS KIT FOR AdBlue® TRANSFER “Barrel Kit”

AdBlue® Kit suitable for filling vehicles from the barrels. Composed by:
stainless steel support bracket for barrels fixing, self-priming electric diaphragm pump, manual or automatic nozzle, delivery EPDM hose 6 m lenght, and suction connections.

“Barrel Kit” series composed by:

Art. 098-6500-230 Diaphragm electric pump for AdBlue® 230V 50 Hz 40 l/min
cable 2 m lenght

Art. 098-6500-115 Diaphragm electric pump for AdBlue® 115V 60 Hz 40 l/min
cable 2 m lenght

Art. 098-6500-012 Diaphragm electric pump for AdBlue® 12V 34 l/min
cable 4 m lenght with pincers

Art. 099-6504-000 Suction kit AF2 56x4 1” BSP

Art. 909-0500-060 Antistatic hose EPDM 20 bar G 3/4” 6 m lenght (19x29)

Art. 911-0500-011 PVC spiral suction hose d.20x25 1,1 m lenght

Art. 099-5199-000 Manual plastic nozzle “AD90” Flow rate 90 l/min

Art. 099-5205-000 Automatic plastic nozzle with stainless steel end “AP80” 80 l/min

Art. 099-6506-000 Adaptor for barrel F 2” BSP - M 56x4

ELECTRIC PUMPS KIT FOR AdBlue® TRANSFER “Barrel Kit”

Ref.	Descrip.	Flow rate	Voltage	Power	Inlet-outlet	Conn. hose	Nozzle	Suction kit	Wei-ght	Packaging
		l/min	AC V./Hz DC Volt	W	BSPG	Ø			kg	mm
097-5700-230	Barrel Kit	**40**	230/50	350	3/4"-3/4"	19X29	Man.AD90	YES	18,00	760X760X265
097-5701-230	Barrel Kit	**40**	230/50	350	3/4"-3/4"	19X29	Aut.AP80	YES	20,00	760X760X265
097-5700-115	Barrel Kit	**40**	115/60	350	3/4"-3/4"	19X29	Man.AD90	YES	18,00	760X760X265
097-5701-115	Barrel Kit	**40**	115/60	350	3/4"-3/4"	19X29	Aut.AP80	YES	20,00	760X760X265
097-5700-012	Barrel Kit	**34**	12	200	3/4"-3/4"	19X29	Man.AD90	YES	16,45	760X760X265
097-5701-012	Barrel Kit	**34**	12	200	3/4"-3/4"	19X29	Aut.AP80	YES	18,45	760X760X265

PUMP DUTY CYCLE min: S2 20

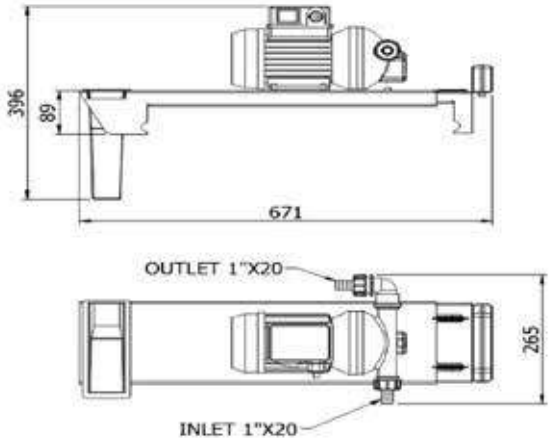

ELECTRIC PUMPS KIT FOR AdBlue® TRANSFER “Barrel Kit”

AdBlue® Kit suitable for filling vehicles from the barrels. Composed by:
stainless steel support bracket for barrels fixing, self-priming electric diaphragm pump, manual or automatic nozzle, delivery EPDM hose 6 m lenght, and suction connections

“Barrel Kit” series composed by:

Art. 098-6500-230 Diaphragm electric pump for AdBlue® 230V 50 Hz 40 l/min cable 2 m lenght

Art. 098-6500-115 Diaphragm electric pump for AdBlue® 115V 60 Hz 40 l/min cable 2 m lenght

Art. 098-6500-012 Diaphragm electric pump for AdBlue® 12V 34 l/min cable 4 m lenght mtwith pincers

Art. 099-5124-000 Digital flow meter MEC 24 min-max flow rate min-max 5-120 l/min.

Art. 099-6504-000 Suction kit AF2 56x4 1” BSP

Art. 909-0500-060 Antistatic hose EPDM 20 bar G 3/4” 6 m lenght (19x29)

Art. 911-0500-011 PVC spiral suction hose d.20x25 1,1 m lenght

Art. 099-5199-000 Manual plastic nozzle “AD90” Flow rate 90 l/min

Art. 099-5205-000 Automatic plastic nozzle with stainless steel end “AP80” 80 l/min

Art. 099-6506-000 Adaptor for barrel F 2” BSP - M 56x4

ELECTRIC PUMPS KIT FOR AdBlue® TRANSFER “Barrel Kit”

Ref.	Descrip.	Flow rate	Voltage	Power	Inlet-outlet	Conn. hose	Nozzle	Suction kit	Flow meter	Wei-ght	Packaging
		l/min	AC V./Hz DC Volt	W	BSPG	Ø				kg	mm
097-5710-230	Barrel Kit	**40**	230/50	350	3/4"-3/4"	19X29	Man.AD90	YES	YES	18,30	760X760X265
097-5711-230	Barrel Kit	**40**	230/50	350	3/4"-3/4"	19X29	Aut.AP80	YES	YES	20,30	760X760X265
097-5710-115	Barrel Kit	**40**	115/60	350	3/4"-3/4"	19X29	Man.AD90	YES	YES	18,30	760X760X265
097-5711-115	Barrel Kit	**40**	115/60	350	3/4"-3/4"	19X29	Aut.AP80	YES	YES	20,30	760X760X265
097-5710-012	Barrel Kit	**34**	12	200	3/4"-3/4"	19X29	Man.AD90	YES	YES	16,75	760X760X265
097-5711-012	Barrel Kit	**34**	12	200	3/4"-3/4"	19X29	Aut.AP80	YES	YES	18,75	760X760X265

PUMP DUTY CYCLE min: S2 20

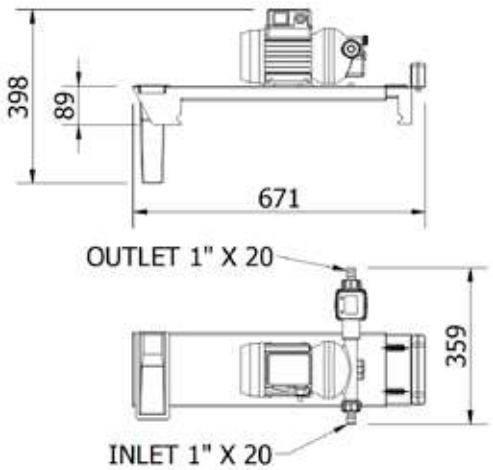

AdBlue® kit suitable for filling vehicles from the barrels.

Composed by: electric diaphragm self-priming pump, manual or automatic nozzle, delivery EPDM hose 6 m lenght, suction hose with valve+filter.

“Portable kit AdBlue®” series composed by:

Art. 098-6500-230 Diaphragm electric pump for AdBlue® 230V 50 Hz 40 l/min cable 2 m lenght

Art. 098-6500-115 Diaphragm electric pump for AdBlue® 115V 60 Hz 40 l/min cable 2 m lenght

Art. 098-6500-012 Diaphragm electric pump for AdBlue® 12V 34 l/min cable 4 m lenght with pincers

Art. 098-6500-024 Diaphragm electric pump for AdBlue® 24V 34 l/min cable 4 m lenght with pincers

Art. 099-6512-015 Kit PVC spiral suction hose d.20x25 1,5 m lenght

Art. 909-0500-060 Antistatic hose EPDM 20 bar G 3/4” 6 m lenght (19x29)

Art. 099-5199-000 Manual plastic nozzle “AD90” Flow rate 90 l/min

Art. 099-5205-000 Automatic plastic nozzle with stainless steel end “AP80” 80 l/min

PORTABLE ELECTRIC PUMPS KIT FOR AdBlue®

Ref.	Descrip.	Flow rate	Voltage	Power	Inlet-outlet	Conn. hose	Nozzle	Adaptor	Wei-ght	Packaging
		l/min	AC V./Hz DC Volt	W	BSPG	Ø			kg	mm
097-5800-230	Portable kit	**40**	230/50	350	3/4"-3/4"	19X29	Man.AD90	Valve+filter	11,50	410X400X320
097-5801-230	Portable kit	**40**	230/50	350	3/4"-3/4"	19X29	Aut.AP80	Valve+filter	13,50	410X400X320
097-5800-115	Portable kit	**40**	115/60	350	3/4"-3/4"	19X29	Man.AD90	Valve+filter	11,50	410X400X320
097-5801-115	Portable kit	**40**	115/60	350	3/4"-3/4"	19X29	Aut.AP80	Valve+filter	13,50	410X400X320
097-5800-012	Portable kit	**34**	12	200	3/4"-3/4"	19X29	Man.AD90	Valve+filter	10,00	410X400X320
097-5801-012	Portable kit	**34**	12	200	3/4"-3/4"	19X29	Aut.AP80	Valve+filter	12,00	410X400X320
097-5800-024	Portable kit	**34**	24	336	3/4"-3/4"	19X29	Man.AD90	Valve+filter	10,00	410X400X320
097-5801-024	Portable kit	**34**	24	336	3/4"-3/4"	19X29	Aut.AP80	Valve+filter	12,00	410X400X320

PUMP DUTY CYCLE min: S2 20

PORTABLE ELECTRIC PUMPS KIT FOR AdBlue®

AdBlue® kit suitable for filling vehicles from the barrels. Composed by: electric diaphragm self-priming pump, manual or automatic nozzle, delivery EPDM hose 6 m lenght, suction hose with valve+filter.

“Portable kit AdBlue®” series composed by:

Art. 098-6500-230 Diaphragm electric pump for AdBlue® 230V 50 Hz 40 l/min cable 2 m lenght

Art. 098-6500-115 Diaphragm electric pump for AdBlue® 115V 60 Hz 40 l/min cable 2 m lenght

Art. 098-6500-012 Diaphragm electric pump for AdBlue® 12V 34 l/min cable 4 m lenght with pincers

Art. 098-6500-024 Diaphragm electric pump for AdBlue® 24V 34 l/min cable 4 m lenght with pincers

Art. 099-5124-000 Digital flow meter MEC 24 min-max flow rate min-max 5-120 l/min.

Art. 099-6512-015 Kit PVC spiral suction hose d.20x25 1,5 m lenght

Art. 909-0500-060 Antistatic hose EPDM 20 bar G 3/4” 6 m lenght (19x29)

Art. 099-5199-000 Manual plastic nozzle “AD90” Flow rate 90 l/min

Art. 099-5205-000 Automatic plastic nozzle with stainless steel end “AP80” 80 l/min

PORTABLE ELECTRIC PUMPS KIT FOR AdBlue®

Ref.	Descrip.	Flow rate	Voltage	Power	Inlet-outlet	Conn. hose	Nozzle	Adaptor	Flow meter	Wei-ght	Packaging
		l/min	AC V./Hz DC Volt	W	BSPG	Ø				kg	mm
097-5810-230	Portable kit	**40**	230/50	350	3/4"-3/4"	19X29	Man.AD90	Valve+filter	YES	11,80	410X400X320
097-5811-230	Portable kit	**40**	230/50	350	3/4"-3/4"	19X29	Aut.AP80	Valve+filter	YES	13,80	410X400X320
097-5810-115	Portable kit	**40**	115/60	350	3/4"-3/4"	19X29	Man.AD90	Valve+filter	YES	11,80	410X400X320
097-5811-115	Portable kit	**40**	115/60	350	3/4"-3/4"	19X29	Aut.AP80	Valve+filter	YES	13,80	410X400X320
097-5810-012	Portable kit	**34**	12	200	3/4"-3/4"	19X29	Man.AD90	Valve+filter	YES	10,30	410X400X320
097-5811-012	Portable kit	**34**	12	200	3/4"-3/4"	19X29	Aut.AP80	Valve+filter	YES	12,30	410X400X320
097-5810-024	Portable kit	**34**	24	336	3/4"-3/4"	19X29	Man.AD90	Valve+filter	YES	10,30	410X400X320
097-5811-024	Portable kit	**34**	24	336	3/4"-3/4"	19X29	Aut.AP80	Valve+filter	YES	12,30	410X400X320

PUMP DUTY CYCLE min: S2 20

CABINET DISTRIBUTOR FOR AdBlue® “Meclube Box”

Solid cabinet in varnished anti-corrosion steel equipped with key closure. The dispenser pump group lies inside with anti-vibration supports. Composed by: electric diaphragm self-priming pump, automatic nozzle, delivery EPDM hose 6 m lenght, suction hose with valve+filter.

“Meclube Box AdBlue®” series composed by:

Art. 098-6500-230 Diaphragm electric pump for AdBlue® 230V 50 Hz 40 l/min cable 2 m lenght

Art. 098-6500-115 Diaphragm electric pump for AdBlue® 115V 60 Hz 40 l/min cable 2 m lenght

Art. 098-6500-012 Diaphragm electric pump for AdBlue® 12V 34 l/min cable 2 m lenght with pincers

Art. 098-6500-024 Diaphragm electric pump for AdBlue® 24V 34 l/min cable 2 m lenght with pincers

Art. 099-5124-000 Digital flow meter MEC 24 min-max flow rate min-max 5-120 l/min.

Art. 099-6512-015 Kit PVC spiral suction hose d.20x25 1,5 m lenght

Art. 909-0500-060 Antistatic hose EPDM 20 bar G 3/4” 6 m lenght (19x29)

Art. 099-5205-000 Automatic plastic nozzle with stainless steel end “AP80” 80 l/min

Art. 099-5210-000 Automatic stainless steel nozzle “AD80” Flow rate 80 l/min With swiveling joint

Art. 090-5053-000 Cabinet for pump group

CABINET DISTRIBUTOR FOR AdBlue® “Meclube Box”

Ref.	Descrip.	Flow rate	Voltage	Power	Inlet-outlet	Conn. hose	Nozzle	Adaptor	Flow meter	Wei-ght	Packaging
		l/min	AC V./Hz DC Volt	W	BSPG	Ø				kg	mm
097-5910-230	Meclube Box	**40**	230/50	350	3/4"-3/4"	19X29	Aut.AP80	Valve+filter	YES	38,50	630X380X605
097-5911-230	Meclube Box	**40**	230/50	350	3/4"-3/4"	19X29	Aut.AD80	Valve+filter	YES	40,50	630X380X605
097-5910-115	Meclube Box	**40**	115/60	350	3/4"-3/4"	19X29	Aut.AP80	Valve+filter	YES	38,50	630X380X605
097-5911-115	Meclube Box	**40**	115/60	350	3/4"-3/4"	19X29	Aut.AD80	Valve+filter	YES	40,50	630X380X605
097-5910-012	Meclube Box	**34**	12	200	3/4"-3/4"	19X29	Aut.AP80	Valve+filter	YES	38,50	630X380X605
097-5911-012	Meclube Box	**34**	12	200	3/4"-3/4"	19X29	Aut.AD80	Valve+filter	YES	40,50	630X380X605
097-5910-024	Meclube Box	**34**	24	336	3/4"-3/4"	19X29	Aut.AP80	Valve+filter	YES	38,50	630X380X605
097-5911-024	Meclube Box	**34**	24	336	3/4"-3/4"	19X29	Aut.AD80	Valve+filter	YES	40,50	630X380X605

PUMP DUTY CYCLE min: S2 20

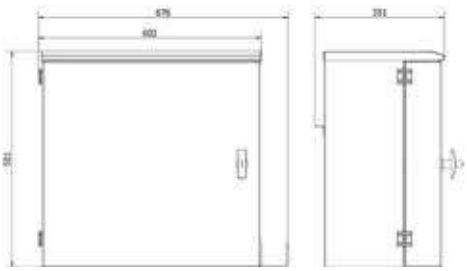

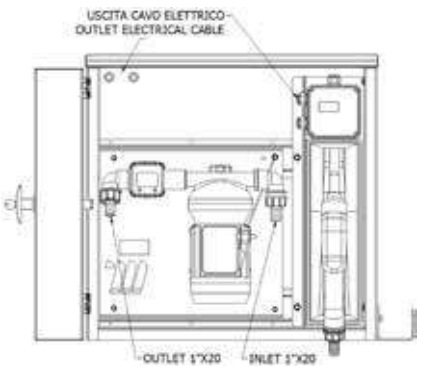

AdBlue® TRANSFER SYSTEM “Electronic Cami Dispenser”

AdBlue® transferring kit in solid structure for private use. It allows the quick and clean filling of the vehicles. It permits the following functions: the identification of the authorised users, the pre-selection of dispensed quantitty, the detection of the total consumption and the single-user consumption, the record of the deliveries and the management of 200 users. The system is equipped with key-manager to start the delivery quickly. The system includes the nozzle holder with microswitch to turn the pump on/off, automatic nozzle with swiveling joint and side hose holder. The equipment can be fixed to the wall, to a tank or to its own column.

“Electronic Cami Dispenser” series composed by:

Art. 098-6500-230 Diaphragm electric pump for AdBlue® 230V 50 Hz 40 l/min
cable 2 m lenght

Art. 909-0500-060 Antistatic hose EPDM 20 bar G 3/4” 6 m lenght (19x29)

Art. 099-5210-000 Automatic stainless steel nozzle “AD80” Flow rate 80 l/min
With swiveling joint

Art. 092-5200-230 Electronic control unit MecGest 110/230V 50Hz
Software included

Art. 099-5170-040 Mechanical pulsed flow meter MGI-40

Art. 092-5220-000 Codified communication kit USB key reader for PC

Art. 092-5300-000 Red Key- Manager - nr. 1 pc.

Art. 090-5073-000 Base Column Cami-Dispenser

OPTIONAL:

Art. 092-5300-010 Kit blue keys - Users - 10 pcs

Art. 099-5240-020 AdBlue® filter 20µ 60 l/min

AdBlue® TRANSFER SYSTEM “Electronic Cami Dispenser”

Art. 097-5074-230

Art. 097-5075-230

Ref.	Descrip.	Flow rate	Voltage	Power	Inlet-outlet	Conn. hose	Nozzle	Flow meter	Working cycle	Column	Wei-ght
		l/min	AC V./Hz DC Volt	W	BSPG	Ø			min		kg
097-5074-230	Cami Dispenser	**40**	230/50	350	3/4"-3/4"	19X29	Aut.AD80	MGI-40	S20-20	NO	28.00
097-5075-230	Cami Dispenser	**40**	230/50	350	3/4"-3/4"	19X29	Aut.AD80	MGI-40	S20-20	YES	51,50

Ref.	Packaging (mm)	Nr. Of boxes
097-5074-230	505x355x425	1
097-5075-230	505x355x425 - 365x305x945	2

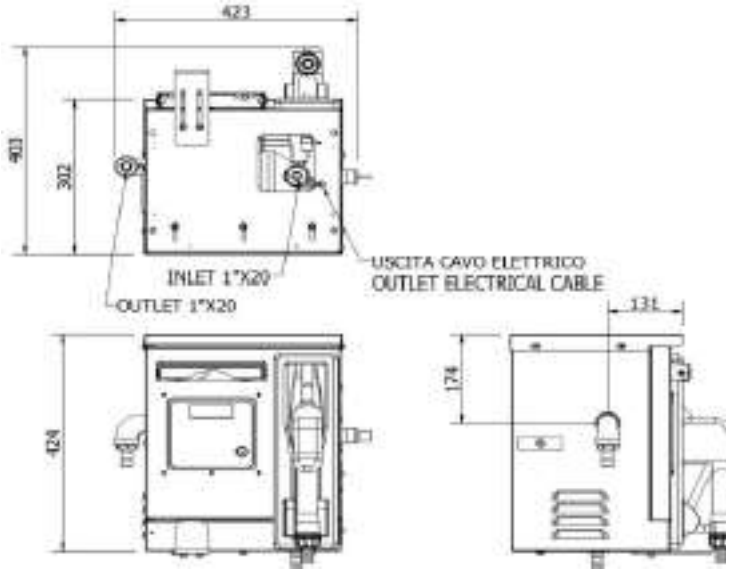

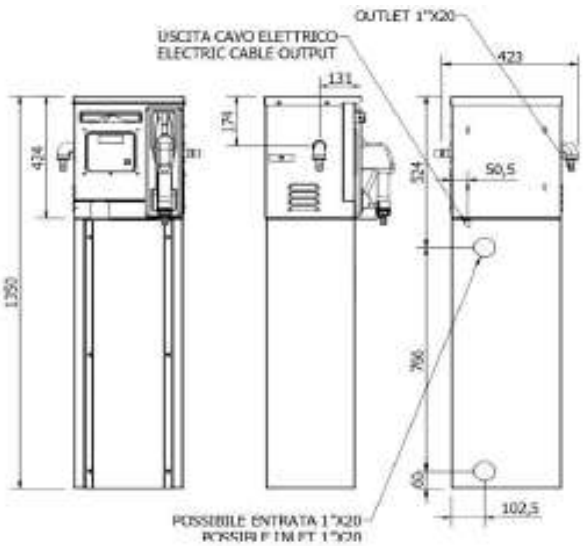

AdBlue® TRANSFER SYSTEM
“Electronic Cami Dispenser LC”

AdBlue® transferring kit for private use. It allows the quick and safe filling of the vehicles. It also permits to measure and record the dispensed quantities. It permits the following functions: the preselection of the dispatched quantity, to see the total dispensed and each single dispense, to memorize the dispatches. The systems comes with a Lan Connection that enables the constant communication with the software, the reception of the type of configuration from remote and the report sending of the dispenses, MecGest can manage up to 200 users. The system is equipped with user-key and manager-key, to quickly start the dispatch. It is equipped with nozzle holder, microswitch to turn the pump on/off, automatic nozzle with swiveling joint, and extractable hose support. The equipment can be fixed to the wall, to a tank or to its column.

“Electronic Cami Dispenser LC” series composed by:

Art. 098-6500-230 Diaphragm electric pump for AdBlue® 230V 50 Hz 40 l/min
cable 2 m lenght

Art. 909-0500-060 Antistatic hose EPDM 20 bar G 3/4” 6 m lenght (19x29)

Art. 099-5210-000 Automatic stainless steel nozzle “AD80” Flow rate 80 l/min
With swiveling joint

Art. 092-5200-230 Electronic control unit MecGest 110/230V 50Hz
Software included

Art. 099-5170-040 Mechanical pulsed flow meter MGI-40

Art. 092-5350-001 Codified Kit Lan Connection USB - RS485

Art. 090-5073-000 Base Column Cami-Dispenser

OPTIONAL:

Art. 092-5300-010 Kit blue keys - Users - 10 pcs

Art. 092-5220-000 Codified communication kit USB key reader for PC

Art. 099-5240-020 AdBlue® filter 20µ 60 l/min

AdBlue® TRANSFER SYSTEM
“Electronic Cami Dispenser LC”

Art. 097-5076-230

Art. 097-5077-230

Ref.	Descrip.	Flow rate	Voltage	Power	Inlet-outlet	Conn. hose	Nozzle	Flow meter	Working cycle	Column	Wei-ght
		l/min	AC V./Hz DC Volt	W	BSPG	Ø			min		kg
097-5076-230	Cami Dispenser	**40**	230/50	350	3/4"-3/4"	19X29	Aut.AD80	MGI-40	S2 20	NO	28.00
097-5077-230	Cami Dispenser	**40**	230/50	350	3/4"-3/4"	19X29	Aut.AD80	MGI-40	S2 20	YES	51,50

Ref.	Packaging (mm)	Nr. Of boxes
097-5076-230	505x355x425	1
097-5077-230	505x355x425 - 365x305x945	2

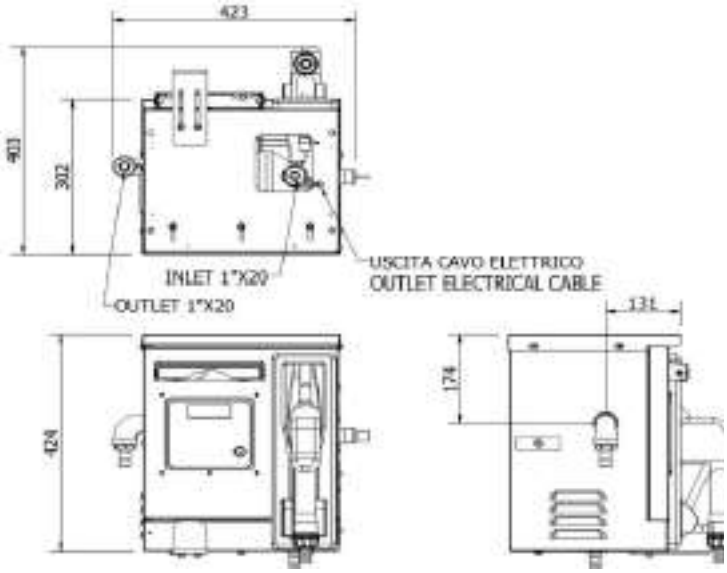

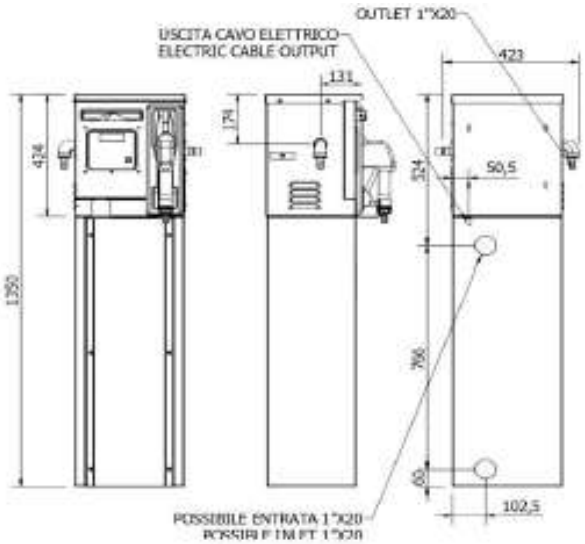

AdBlue® TRANSFER SYSTEM “Electronic Gaia Service”

AdBlue® transferring kit in solid structure for private use. It allows the quick and clean filling of the vehicles. It permits the following functions: the identification of the authorised users, the pre-selection of dispensed quantitty, the detection of the total consumption and the single-user consumption, the storage of the deliveries and the management of 200 users. The system is equipped with key-manager to start the delivery quickly. The system includes the nozzle holder with microswitch to turn the pump on/off, automatic nozzle with swiveling joint and side hose holder.

“Electronic Gaia Service” series composed by:

Art. 098-6500-230 Diaphragm electric pump for AdBlue® 230V 50 Hz 40 l/min
cable 2 m lenght

Art. 909-0500-060 Antistatic hose EPDM 20 bar G 3/4” 6 m lenght (19x29)

Art. 099-5210-000 Automatic stainless steel nozzle “AD80” Flow rate 80 l/min
With swiveling joint

Art. 092-5200-230 Electronic control unit MecGest 110/230V 50Hz
Software included

Art. 099-5170-040 Mechanical pulsed flow meter MGI-40

Art. 099-5240-020 AdBlue® filter 20µ 60 l/min

Art. 092-5220-000 Codified communication kit USB key reader for PC

Art. 092-5300-000 Red Key- Manager - nr. 1 pc.

OPTIONAL:

Art. 092-5300-010 Kit blue keys - Users - 10 pcs

Art. 097-5084-230

H. 1380 mm

Art. 097-5085-230

H. 980 mm

Ref.	Descrip.	Flow rate	Voltage	Power	Inlet-outlet	Conn. hose	Nozzle	Flow meter	Filter	Working cycle	Wei-ght
		l/min	AC V./Hz DC Volt	W	BSPG	Ø				min	kg
H. 1380 mm											
097-5084-230	Gaia Service	**40**	230/50	350	3/4"-3/4"	19X29	Aut.AD80	MGI-40	YES	S2 20	67,50
H. 980 mm	**Suitable for tank fixing**										
097-5085-230	Gaia “Tank”	**40**	230/50	350	3/4"-3/4"	19X29	Aut.AD80	MGI-40	YES	S2 20	59,50

Ref.	Packaging (mm)	Nr. Of boxes
097-5084-230	530x490x1410	1
097-5085-230	530x490x1010	2

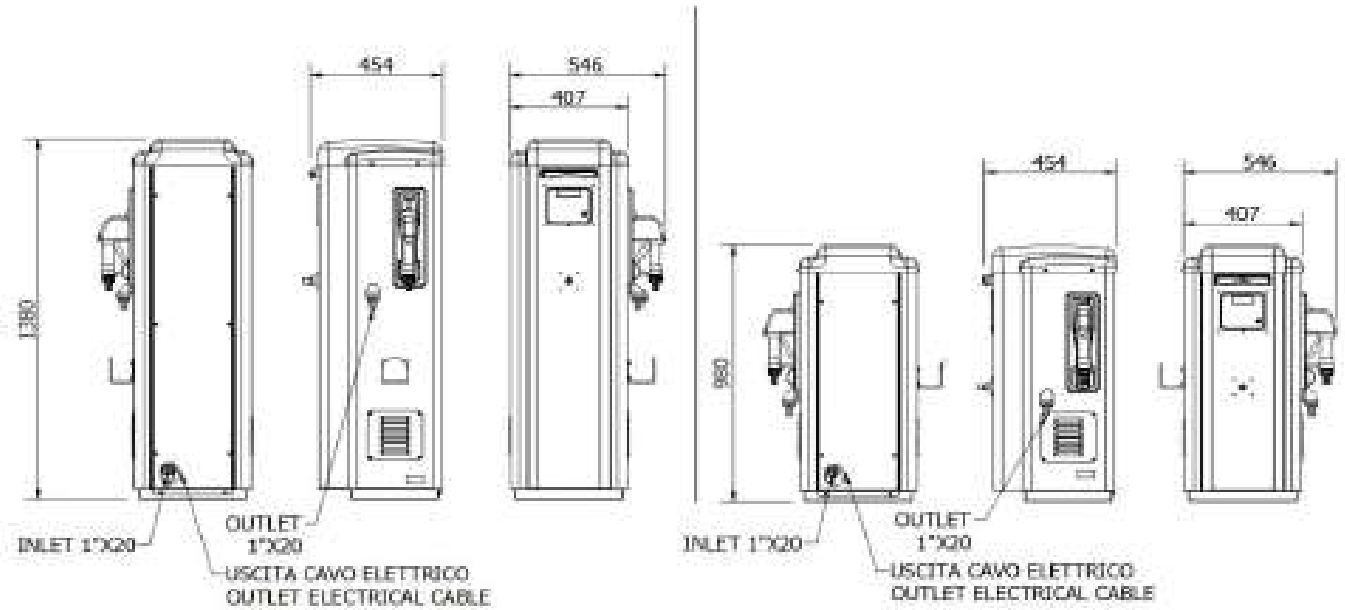

AdBlue® TRANSFER SYSTEM “Electronic Gaia Service LC”

AdBlue® transferring kit in solid structure for private use. It allows the quick and clean filling of the vehicles. It also permits to measure and record the dispensed quantities. It permits the following functions: the preselection of the dispatched quantity, to see the total dispensed and each single dispense, to memorize the dispatches. The systems comes with a Lan Connection that enables the constant communication with the software, the reception of the type of configuration from remote and the report sending of the dispenses, MecGest can manage up to 200 users. The system includes the nozzle holder with microswitch to turn the pump on/off, automatic nozzle with swiveling joint and hose holder.

“Electronic Gaia Service LC” series composed by:

Art. 098-6500-230 Diaphragm electric pump for AdBlue® 230V 50 Hz 40 l/min
cable 2 m lenght

Art. 909-0500-060 Antistatic hose EPDM 20 bar G 3/4” 6 m lenght (19x29)

Art. 099-5210-000 Automatic stainless steel nozzle “AD80” Flow rate 80 l/min
With swiveling joint

Art. 092-5200-230 Electronic control unit MecGest 110/230V 50Hz
Software included

Art. 099-5170-040 Mechanical pulsed flow meter MGI-40

Art. 099-5240-020 AdBlue® filter 20µ 60 l/min

Art. 092-5350-001 Codified Kit Lan Connection USB - RS485

OPTIONAL:

Art. 092-5300-010 Kit blue keys - Users - 10 pcs

Art. 092-5220-000 Codified communication kit USB key reader for PC

Art. 097-5086-230

H. 1380 mm

Art. 097-5087-230

H. 980 mm

Ref.	Descrip.	Flow rate	Voltage	Power	Inlet-outlet	Conn. hose	Nozzle	Flow meter	Filter	Working cycle	Wei-ght
		l/min	AC V./Hz DC Volt	W	BSPG	Ø				min	kg
H. 1380 mm											
097-5086-230	Gaia Service	**40**	230/50	350	3/4"-3/4"	19X29	Aut.AD80	MGI-40	YES	S2 20	67,50
H. 980 mm	**Suitable for tank fixing**										
097-5087-230	Gaia “Tank”	**40**	230/50	350	3/4"-3/4"	19X29	Aut.AD80	MGI-40	YES	S2 20	59,50

Ref.	Packaging (mm)	Nr. Of boxes
097-5086-230	530x490x1410	1
097-5087-230	530x490x1010	2

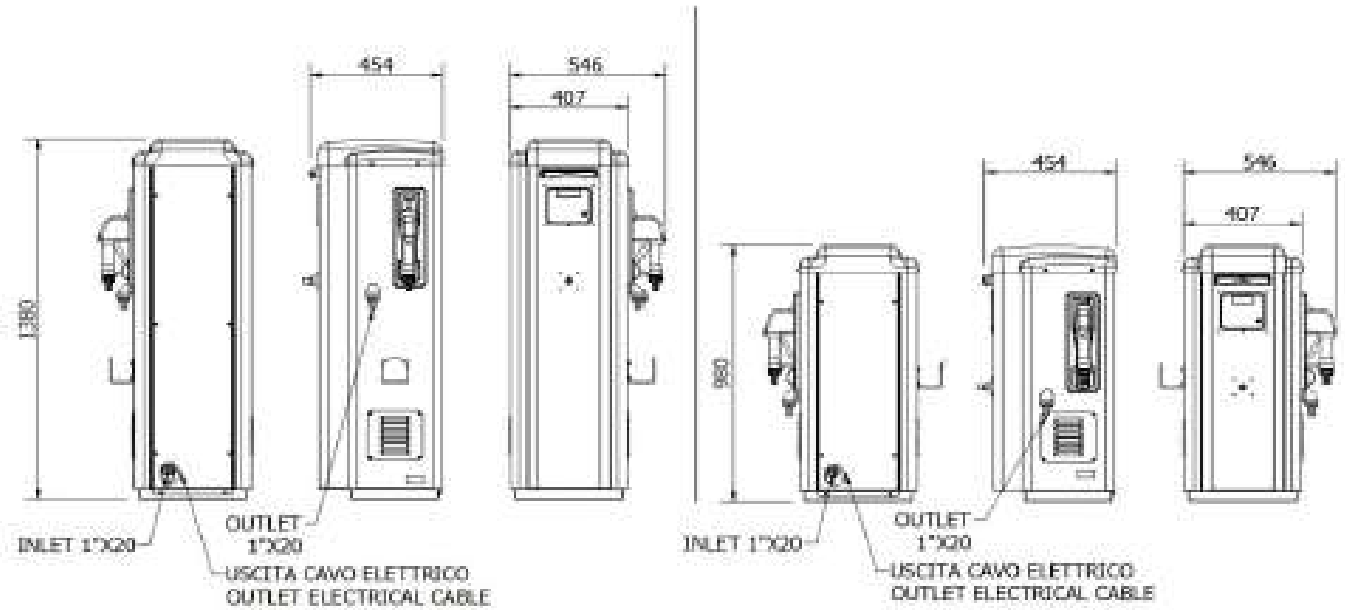

Rigid polyethylene tank for AdBlue® transport for non-commercial use, with built-in transfer unit consisting of rotary vane self-priming pump available in various voltages (12-24V). Delivery hose ø 19 mm 4 m lenght and automatic nozzle. The system is available at 220 liters and can be integrated with digital flow meter. The tank is equipped with 2” filling plug with pressurizing/depressurizing relief valve. See ADR Regulations at page 180.

“AdBlue® Tank 220” series composed by:

Art. 097-6220-000 Tank 220 l without pumps

Art. 098-6500-012 Electric diaphragm pump for AdBlue® 12V 34 l/min
cable 4 m lenght with pincers

Art. 098-6500-024 Electric diaphragm pump forAdBlue® 24V 34 l/min
cable 4 m lenght with pincers

Art. 099-5124-000 Digital flow meter MEC 24 min-max flow rate 5-120 l/min.

Art. 909-0500-040 Antistatic hose EPDM 20 bar G 3/4” 4 m lenght (19x29)

Art. 099-5210-000 Automatic stainless steel nozzle “AD80” Flow rate 80 l/min

Ref.	Descrip.	Flow meter	Voltage	Power	Inlet-outlet	Conn. hose	Nozzle	Cable L.mt	Flow meter	Wei-ght	Packaging
		l/min	AC V./Hz DC Volt	W	BSPG	Ø				kg	mm
097-6220-012	Tank 220 l	**34**	12	200	3/4"-3/4"	19X29	Aut.AD80	4	NO	24,00	910X600X620
097-6221-012	Tank 220 l	**34**	12	200	3/4"-3/4"	19X29	Aut.AD80	4	YES	24,50	910X600X620
097-6220-024	Tank 220 l	**34**	24	336	3/4"-3/4"	19X29	Aut.AD80	4	NO	24,00	910X600X620
097-6221-024	Tank 220 l	**34**	24	336	3/4"-3/4"	19X29	Aut.AD80	4	YES	24,50	910X600X620

PUMP DUTY CYCLE min: S2 20

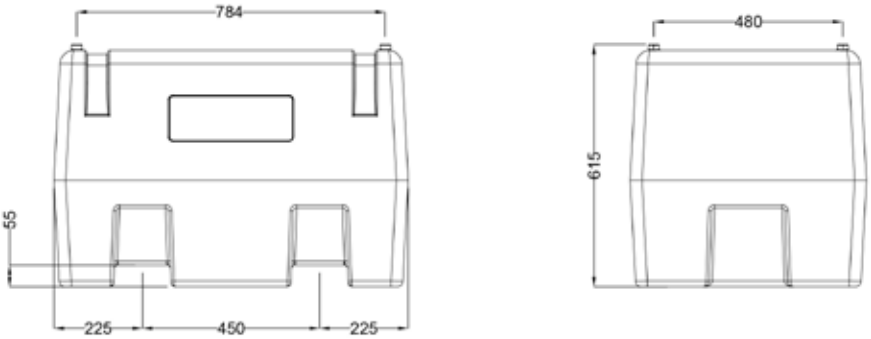

Rigid polyethylene tank for AdBlue® transport for non-commercial use, with built-in transfer unit consisting of rotary vane self-priming pump available in various voltages (12-24V). Delivery hose ø 19 mm 4 m lenght and automatic nozzle. The system is available at 440 liters and can be integrated with digital flow meter. The tank is equipped with 2” filling plug with pressurizing/depressurizing relief valve. See ADR Regulations at page 180.

“AdBlue® Tank 440” series composed by:

Art. 097-6440-000 Tank 440 l without pumps

Art. 098-6500-012 Electric diaphragm pump for AdBlue® 12V 34 l/min
cable 4 m lenght with pincers

Art. 098-6500-024 Electric diaphragm pump for AdBlue® 24V 34 l/min
cable 4 m lenght with pincers

Art. 099-5124-000 Digital flow meter MEC 24 min-max flow rate min-max 5-120 l/min.

Art. 909-0500-040 Antistatic hose EPDM 20 bar G 3/4” 4 m lenght (19x29)

Art. 099-5210-000 Automatic stainless steel nozzle “AD80” Flow rate 80 l/min

Art. 092-6000-220 Probe for tank 330 l - 440 l

Ref.	Descrip.	Flow rate	Voltage	Power	Inlet-outlet	Conn. hose	Nozzle	Cable L.mt	Flow meter	Wei-ght	Packaging
		l/min	AC V./Hz DC Volt	W	BSPG	Ø				kg	mm
097-6440-012	Tank 440 l	**34**	12	200	3/4"-3/4"	19X29	Aut.AD80	4	NO	52,00	1200X800X785
097-6441-012	Tank 440 l	**34**	12	200	3/4"-3/4"	19X29	Aut.AD80	4	YES	52,50	1200X800X785
097-6440-024	Tank 440 l	**34**	24	336	3/4"-3/4"	19X29	Aut.AD80	4	NO	52,00	1200X800X785
097-6441-024	Tank 440 l	**34**	24	336	3/4"-3/4"	19X29	Aut.AD80	4	YES	52,50	1200X800X785

PUMP DUTY CYCLE min: S2 20

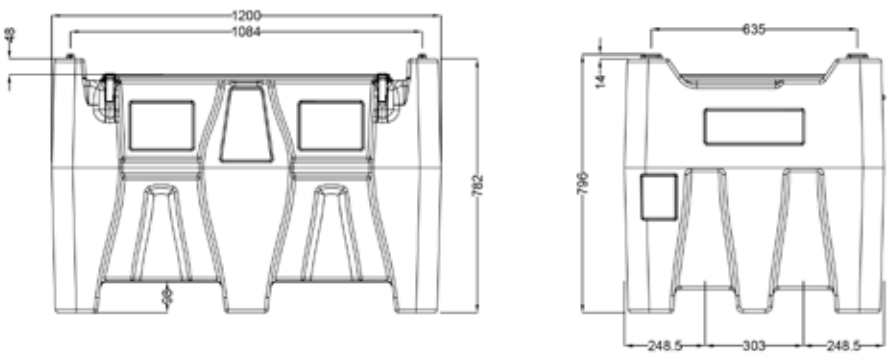

Tank made of linear high density polyethylene, resistant to UV radiations with distribution cabinet for AdBlue® / DEF / Arla32. It is available in the version of 12V and 230V, with digital flow meter, stainless steel automatic nozzle, key lock and EPDM delivery hose of 3/4’’ L. 6m. The tank is available of 3000 l and 5000 l with closing cap with D. 42 cm.

DEF-Tank is provided with 1’’ vent valve, 2’’ filling hose and 1’’ suction hose.

The tank is designed to allow a great functioning of SCR systems (Selective Catalytic Reduction).

“DEF-Tank” series composed by:

Art. 097-9300-000 3000 l polyethylene tank

Art. 097-9500-000 5000 l polyethylene tank

Art. 097-5911-230 Meclube Box 230V, automatic nozzle AD80 digital flow meter and hose 3/4” lenght.6 m

Art. 097-5911-012 Meclube Box 12V, automatic nozzle AD80 digital flow meter and hose 3/4” lenght.6 m

AdBlue® TANK-DISTRIBUTOR “DEF-Tank”

Tank Technical Data

Ref.	Description	Capacity	Voltage	Width	Depth	Height	Total weight	Packaging
		l	AC V./Hz DC Volt	mm	mm	mm	Kg	mm
097-9300-230	**DEF-Tank**	**3000**	230/50	2200	1820	1910	165	2200X1600X2060
097-9300-012	**DEF-Tank**	**3000**	12	2200	1820	1910	165	2200X1600X2060
097-9500-230	**DEF-Tank**	**5000**	230/50	2670	2000	2220	215	2200X1600X2370
097-9500-012	**DEF-Tank**	**5000**	12	2670	2000	2220	215	2200X1600X2370

AdBlue®

Meclube Box Technical Data

Ref.	Description	Flow Rate	Voltage	Power	Inlet Outlet	Conn. Hose	Nozzle	Flow Meter	Weight
		l/min	AC V./Hz DC Volt	W	BSPG	Ø			Kg
097-5911-230	Meclube Box	**40**	230/50	350	3/4”-3/4”	19X29	Aut.AD80	YES	40,50
097-5911-012	Meclube Box	**34**	12	200	3/4”-3/4”	19X29	Aut.AD80	YES	40,50

Pump Working Cycle min: S2 20

AdBlue® CADDY 55

Rigid polyethylene tank for AdBlue® for professional and private use, suitable for the refueling small operative vehicles and light operative or recreational vechicles. They are equipped with run-flat tyres and suitable for moving on any ground. Every container can be filled vertically or horizontaly, with the same Urea quantity. Provide with nozzle holder bracket, safety valve with swiveling joint, filling plug with anti-spill relief valve. See ADR Regulations at page 180.

“Caddy” series composed by:

Art. 097-6055-M00 Wheeled tank Caddy 55 l AdBlue

Art. 099-5625-000 Manual rotary pump for AdBlue®

Art. 908-0500-040 Antistatic rubber hose Ø 20 mm 4 m lenght

Art. 099-5199-000 Manual plastic nozzle “AD90” for AdBlue® Flow rate 90 l/min

AdBlue® CADDY 55

55 l

Ref.	Descrip.	Capacity for 100 revolutions		Width	Depth	Height	Nozzle	Weight	Packaging
		l	USG	mm	mm	mm		kg	mm
097-6055-M00	Caddy 55 l	**38**	10	460	360	900	Man.AD90	8,00	1000X500X500

AdBlue® TRANSFER SYSTEM FOR VEHICLES “Giuly-Blu”

Trolley for the transport of AdBlue® barrels, specifically designed for filling the vehicles tanks. It’s equipped with self-priming electric double diaphragm pump, automatic nozzle, flow rate reducer, digital turbine flow meter, IBC adaptor and telescopic suction hose. The plastic barrel and the tanks are not included.

“Giuly-Blu” series composed by:

Art. 098-6500-230 Electric diaphragm pump for AdBlue® 230V 50 Hz 40 l/min cable 2 m lenght

Art. 098-6500-012 Electric diaphragm pump for AdBlue® 12V 34 l/min cable 4 m lenght

Art. 911-0500-015 PVC spiral suction hose ø 20x252 mm 1,5 m lenght

Art. 909-0500-040 Connection hose EPDM ø 20 mm M-M 4,0 m lenght

Art. 099-5205-000 Automatic plastic nozzle with stainless steel end AP80 80 l/min.

Art. 099-5124-000 Digital flow meter MEC 24 min-max flow rate 5-120 l/min.

Art. 099-6500-000 Suction hose 2” BSP SEC connection

Art. 099-6600-000 Adaptor for suction hose SEC connection

Art. 030-1398-000 Trolley 3 wheels with brake

AdBlue® TRANSFER SYSTEM FOR VEHICLES "Giuly-Blu"

Art. 097-5750-230
Art. 097-5750-012

Art. 097-5752-230
Art. 097-5752-012

Giuly-Blu IBC

Drum and cistern not included

Ref.	Descrip.	Max. Nominal Flow Rate	Voltage	Power	Flow Rate	Delivery Hose	Suction Hose	Nozzle	Trolley	Wei-ght
		LPM / GPM	AC V./Hz DC Volt	W	min	Ø / mm	Ø / mm			kg
097-5750-230	Giuly-Blu IBC	4 - 40 / 1 - 9	230 / 50	350	S2 30	20	20	Aut.AP80	NO	30,00
097-5750-012	Giuly-Blu IBC	4 - 34 / 1 - 9,2	12	200	S2 20	20	20	Aut.AP80	NO	30,00
097-5752-230	Giuly-Blu Trolley	4 - 40 / 1 - 9	230 / 50	350	S2 30	20	20	Aut.AP80	YES	52,40
097-5752-012	Giuly-Blu Trolley	4 - 34 / 1 - 9,2	12	200	S2 20	20	20	Aut.AP80	YES	52,40

Ref.	Packaging (mm)	Nr. Of boxes
097-5750-230	385X325X655	1
097-5750-012	385X325X655	1
097-5752-230	(385X325X655) + (920X790X250)	2
097-5752-012	(385X325X655) + (920X790X250)	2

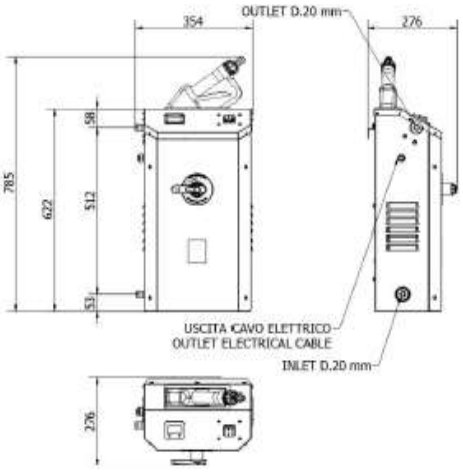

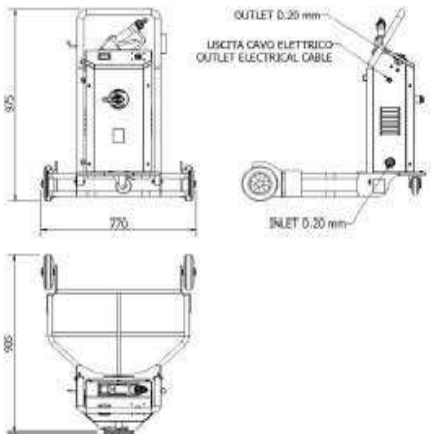

AdBlue® TRANSFER SYSTEM FOR VEHICLES “Giuly-Blu” PROFESSIONAL

Trolley for the transport of AdBlue® barrels, specifically designed for filling the vehicles tanks. It’s equipped with self-priming electric double diaphragm pump, automatic nozzle, flow rate reducer, digital turbine flow meter, IBC adaptor and telescopic suction hose. The plastic barrel and the tanks are not included.

“Giuly-Blu” series composed by:

Art. 098-6500-230 Electric diaphragm pump for AdBlue® 230V 50 Hz 40 l/min
cable 2 m lenght

Art. 098-6500-012 Electric diaphragm pump for AdBlue® 12V 34 l/min
cable 4 m lenght

Art. 911-0500-015 PVC spiral suction hose ø 20x252 mm 1,5 m lenght

Art. 909-0500-040 Connection hose EPDM ø 20 mm M-M 4,0 m lenght

Art. 099-5220-000 ZVA Automatic nozzle for AdBlue ® LV / Urea according to ISO 22241-1 (DEF/AUS/ARLA 32) for light vehicles < 3,5 t.
With ATEX certificate (EX II 1G) Certificate Nr. SIRA 03ATEX9 487U
Swivelling joint with integrated and certified flow regulator :
TÜV - P-TÜ7-8113338228 ISO 22241
Complete with adaptor EW 22

Art. 099-5124-000 Digital flow meter MEC 24 min-max flow rate 5-120 l/min.

Art. 099-6500-000 Suction hose 2” BSP SEC connection

Art. 099-6600-000 Adaptor for suction hose SEC connection

Art. 030-1398-000 Trolley 3 wheels with brake

AdBlue® TRANSFER SYSTEM FOR VEHICLES "Giuly-Blu" PROFESSIONAL

Art. 097-5760-230
Art. 097-5760-012

Art. 097-5762-230
Art. 097-5762-012

Giuly-Blu IBC

Drum and cistern not included

Ref.	Descrip.	Max. Nominal Flow Rate	Voltage	Power	Flow Rate	Delivery Hose	Suction Hose	Nozzle	Trolley	Wei-ght
		l/min	AC V./Hz DC Volt	W	l/min	Ø / mm	Ø / mm			kg
097-5760-230	Giuly-Blu Prof	5 - 10	230 / 50	350	40	20	20	ZVA LV	NO	30,00
097-5760-012	Giuly-Blu Prof	5 - 10	12	200	34	20	20	ZVA LV	NO	30,00
097-5762-230	Giuly-Blu Prof Trolley	5 - 10	230 / 50	350	40	20	20	ZVA LV	YES	52,40
097-5762-012	Giuly-Blu Prof Trolley	5 - 10	12	200	34	20	20	ZVA LV	YES	52,40

Ref.	Packaging (mm)	Nr. Of boxes
097-5760-230	385X325X655	1
097-5760-012	385X325X655	1
097-5762-230	(385X325X655) + (920X790X250)	2
097-5762-012	(385X325X655) + (920X790X250)	2

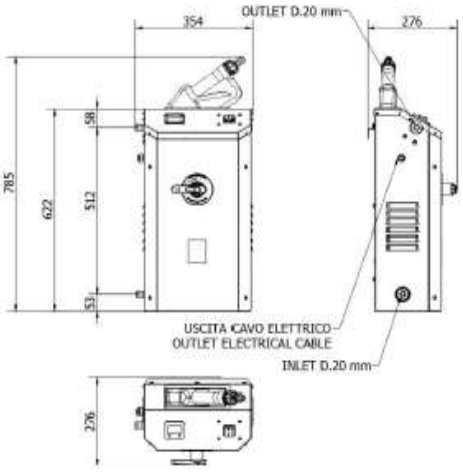

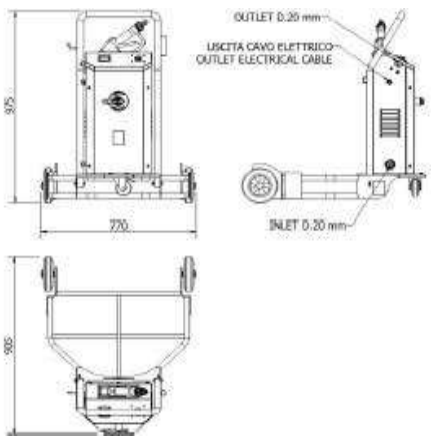

TROLLEY FOR BARRELS 180-200 l

Varnished trolleys advised for the transport of barrels (AdBlue®, oil, grease and similar) of 180-220 kg in work places.

Art. 030-1398-000 Trolley for barrel 180-220 l
Pre-arranged for application of the hose reel

EQUIPPED WITH:
Nr. 2 fixed wheels Ø 200 mm
Nr. 1 swiveling wheel Ø 125 mm
(equipped with locking device)
Band for fixing barrels
Base dimension 600 x 470 mm

Art. 030-1400-000 Trolley for barrel 180-220 l

EQUIPPED WITH:
Nr. 2 fixed wheels Ø 250 mm
Nr. 2 swiveling wheel Ø 125 mm
Base dimension 610 x 610 mm

Art. 030-1405-000 Trolley for barrel 180-220 l
Pre-arranged for application of the hose reel

EQUIPPED WITH:
Nr. 2 fixed wheels Ø 250 mm
Nr. 2 swiveling wheel Ø 180 mm
(one equipped with locking device)
Base dimension 610 x 610 mm

Ref.	Wheels	For barrel	Base dimension	Weight	Packaging
	nr.	l	mm	Kg	mm
030-1398-000	3	180/220	600x470	22,4	920X790X250
030-1400-000	4	180/220	610x610	37,1	920X790X250
030-1405-000	4	180/220	610x610	48,6	920X790X250

ELECTRIC DIAPHRAGM PUMPS FOR AdBlue®
AIR-OPERATED DOUBLE DIAPHRAGM PUMPS

Electric diaphragm self-priming pump without any dynamic seals. Suitable for aggressive fluids transfer like AdBlue®.

Art. 098-6500-230 Electric diaphragm pump for AdBlue®
230V 50Hz 40 l/min

Duty cycle: 20 min
Housing: Polypropylene
Diaphragm: EPDM
Check valve: Viton
Check valve spring: stainless steel 316
Motor shaft: stainless steel 316
Switch ON / OFF
Rubber holder fitting F1" Ø 20
2 m cable with socket

Art. 098-6500-115 Electric diaphragm pump for AdBlue®
120V 60Hz 40 l/min

Duty cycle: 20 min
Housing: Polypropylene
Diaphragm: EPDM
Check valve: Viton
Check valve spring: stainless steel 316
Motor shaft: stainless steel 316
Switch ON / OFF
Rubber holder fitting F1" Ø 20
2 m cable with socket

Ref.	Flow rate	Voltage	Power	Electricity	Inlet-outlet	Cable lenght	Duty cycle	Weight	Packaging
	l/min	V / Hz	W	A	BSPG	m	min	Kg	mm
098-6500-230	**40**	230/50	350	1,5	3/4" - 3/4"	2	S2 20	6,5	320X190X230
098-6500-115	**40**	120/60	350	3,5	3/4" - 3/4"	2	S2 20	6,5	320X190X230

Electric diaphragm self-priming pump without any dynamic seals. Suitable for aggressive fluids transfer like AdBlue®

Art. 098-6500-012 Electric diaphragm pump for AdBlue®
12V 34 l/min

Duty cycle: 20 min
Housing: Polypropylene
Diaphragm: EPDM
Check valve: Viton
Check valve spring: stainless steel 316
Motor shaft: stainless steel 316
Switch ON / OFF
4 m cable with socket
Rubber holder fitting F1” Ø20

Art. 098-6500-024 Electric diaphragm pump forAdBlue®
24V 34 l/min

Duty cycle: 20 min
Housing: Polypropylene
Diaphragm: EPDM
Check valve: Viton
Check valve spring: stainless steel 316
Motor shaft: stainless steel 316
Switch ON / OFF
4 m cable with socket
Rubber holder fitting F1” Ø20

Ref.	Flow rate	Voltage	Power	Electricity	Inlet-outlet	Cable Lenght	Duty cycle	Weight	Packaging
	l/min	V / Hz	W	A	BSPG	m	min	Kg	mm
098-6500-012	**34**	12	200	20	3/4" - 3/4"	4	S2 20	5	320X190X230
098-6500-024	**34**	24	336	14	3/4" - 3/4"	4	S2 20	5	320X190X230

SUBMERSIBLE AdBlue® ELECTRO-PUMP “Mec-Ariel”

Submersible multi-impeller electro-pump designed for AdBlue®/DEF/Arla32. The pump is complete with power supply cable L.5m with case H07BN4-F and connection with clapet valve, plastic structure suitable for Adblue®. The equipment complies with EN 60335-1/EN 60034-1/IEC 60335-1/IEC 60034-1/CEI 61-150/CEI 2-3. The electro-pump works with S1 service continuously with flow rate up to 70 l/min and delivery head up to 27m, it can be used under the liquid level up to a maximum of 3m. Emptying level up to 25mm from the bottom. Electric engine with insulation in F class, IP X8 protection.

Art. 098-7000-230 Submersible electro-pump for AdBlue® “Mec-Ariel”
230V 50Hz 70 l/min

It is designed to pump clean liquid defined according to ISO 22241 standard as AUS32 (Aqueous Urea Solutions 32,5%).
This liquid corresponds to commercial names known as:
-**AdBlue®** (brand registered by Verband der automobilindustrie VDA)
-**DEF** (Diesel Exhausted Fluid)
-**Arla 32** (Agente Reductor Líquido de Oxido de Nitrogenio Automotivo)

PERFORMANCE DATA

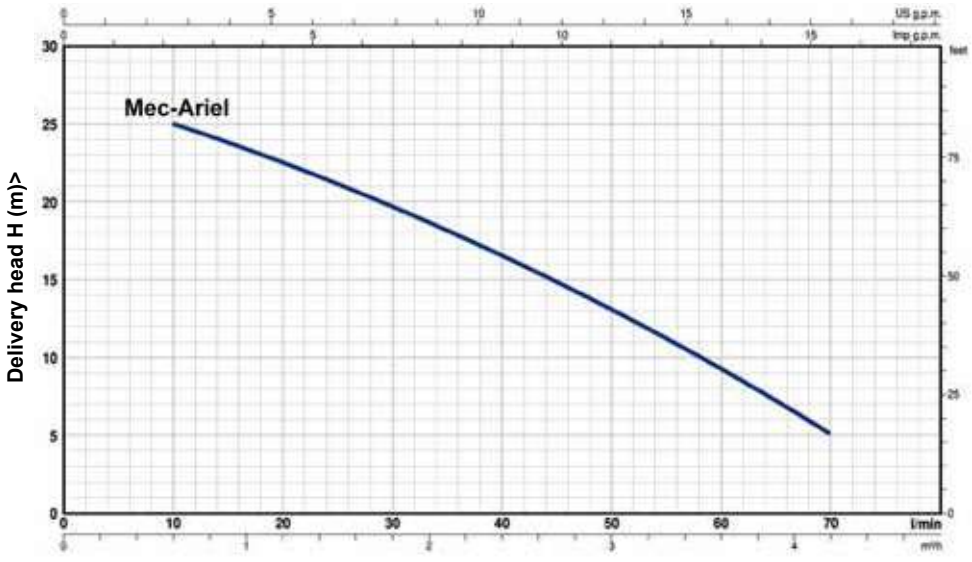

Ref.	Power (P2)		Q	m3/h	0	0,6	1,2	1,8	2,4	3	3,6	4,2
	kW	HP		l/min	0	10	20	30	40	50	60	70
098-7000-230	0,37	0,5	**H**	meters	27	25	22,5	19,5	16,5	13	9	5

Q=Flow rate H= Total manometric delivery head
Tolerance of perfomance curves according to EN ISO 9906 Degree 38

Technical Data

Ref.	Description	Voltage	Flow rate	Liquid. Max. Temper	Power	Cable lenght	Working cycle	Packaging
		V / Hz	l/min	°C	A	m	min	mm
098-7000-230	Mec-Ariel	**230/50**	**70**	+40	2	5	S1 (continuos)	235X195X370

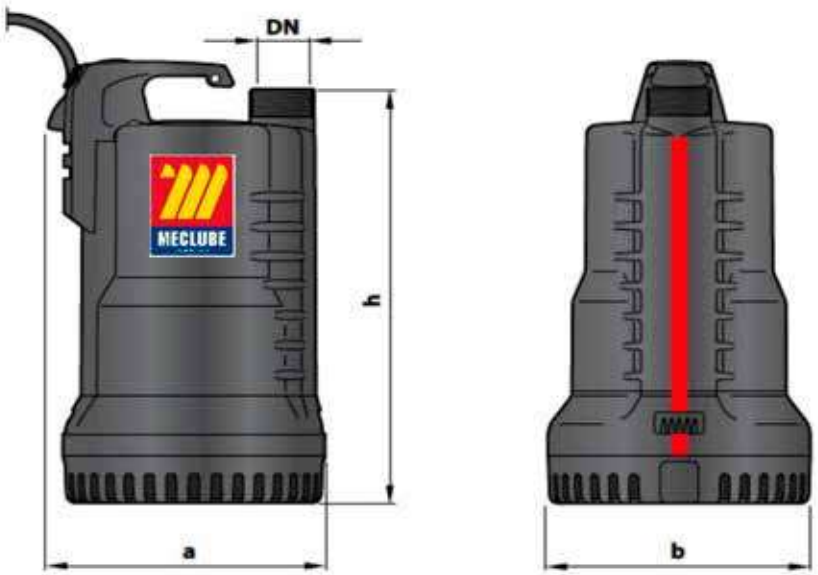

Typical installation

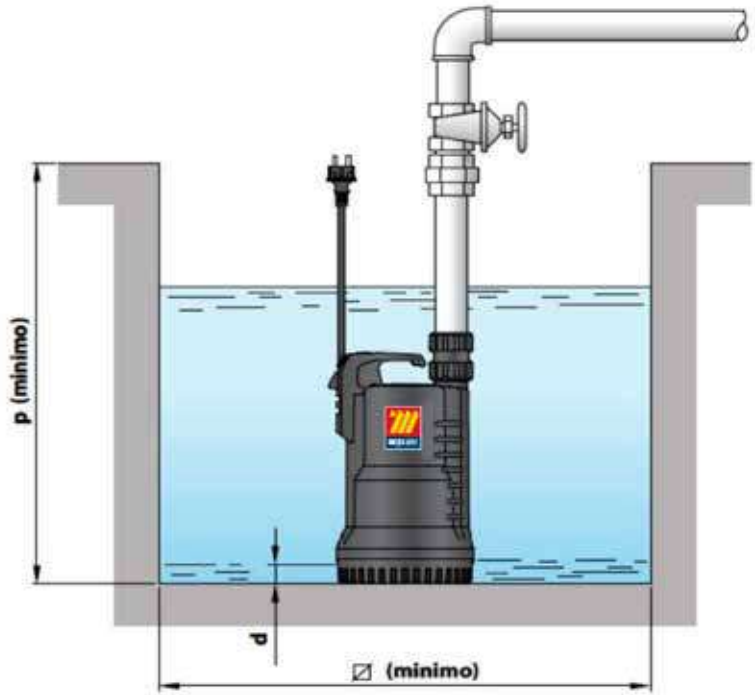

Ref.	Entrance	Stages N°	Dimensions (mm)					Weight
	DN		a	b	h	d	⍁	kg
098-7000-230	1 1/4”	**2**	180	170	295	25	220	6,15

AIR-OPERATED DOUBLE DIAPHRAGM PUMPS

Air-operated double diaphragm pumps have long been recognized as the most flexible pumps for handling difficult liquids at relatively low pressures and flows. The range of applications is virtually limitless. MECLUBE AODD pumps come in many sizes and choices of construction materials. Suitable for water, antifreeze, windscreen and AdBlue® transfer.

EX II 3/3 GD h IIB T4 135°C ATEX zone2

Art. 028-P035-AB2 Air-operated double diaphragm pump
Meclube model P35

Made in polypropylene

Compression ratio: 1:1
Max flow rate: 35 l/min
Fluid connection: 1/2" BSP
Air connection: 6 mm
Max air pressure: 8 bar
Max delivery height: 70 m
Max suction lift dry: 5,0 m
Max suction lift wet: 9,8 m

EX II 3/3 GD h IIB T4 135°C ATEX zone2

Art. 028-P055-AB2 Air-operated double diaphragm pump
Meclube model P55

Made in polypropylene

Compression ratio: 1:1
Max flow rate: 55 l/min
Fluid connection: 1/2" BSP
Air connection: 1/4" BSP
Max air pressure: 8 bar
Max delivery heigh: 80 m
Max suction lift dry: 5,0 m
Max suction lift wet: 9,8 m

Ref.	Casing	Diaphragm	Balls	Gasket	Fluids
028-P035-AB2	Polypropylene	Hytrel+Ptfe	Ptfe	Viton	Water-Anti-freeze-Windscreen- AdBlue®
028-P055-AB2	Polypropylene	Hytrel+Ptfe	Ptfe	Viton	Water-Anti-freeze-Windscreen- AdBlue®

Ref.	Flow rate	Max viscosity	Max.Temp.	Inlet-outlet	Weight	Packaging
	l/min	CPS	°C	BSPG	Kg	mm
028-P035-AB2	**35**	15000	65	1/2"	2	250X180X260
028-P055-AB2	**55**	20000	65	1/2"	4	310X195X290

Air-operated double diaphragm pumps have long been recognized as the most flexible pumps for handling difficult liquids at relatively low pressures and flows. The range of applications is virtually limitless. MECLUBE AODD pumps come in many sizes and choices of construction materials. Suitable for water, antifreeze, windscreen and AdBlue® transfer.

EX II 3/3 GD h IIB T4 135°C ATEX zone2

Art. 028-P110-AB2 Air-operated double diaphragm pump
Meclube model P110

Made in polypropylene

Compression ratio: 1:1
Max flow rate: 110 l/min
Fluid connection: 3/4” BSP
Air connection: 3/8” BSP
Max air pressure: 8 bar
Max delivery height: 80 m
Max suction lift dry: 5,0 m
Max suction lift wet: 9,8 m

EX II 3/3 GD h IIB T4 135°C ATEX zone2

Art. 028-P170-AB2 Air-operated double diaphragm pump
Meclube model P170

Made in polypropylene

Compression ratio: 1:1
Max flow rate: 170 l/min
Fluid connection: 1” BSP
Air connection: 1/2” BSP
Max air pressure: 8 bar
Max delivery height:: 80 m
Max suction lift dry: 5,0 m
Max suction lift wet: 9,8 m

Ref.	Casing	Diaphragm	Blass	Gasket	Fluids
028-P110-AB2	Polypropylene	Hytrel+Ptfe	Ptfe	Viton	Water-Anti-freeze-Windscreen- AdBlue®
028-P170-AB2	Polypropylene	Hytrel+Ptfe	Ptfe	Viton	Water-Anti-freeze-Windscreen- AdBlue®

Ref.	Flow rate	Max viscosity	Max.Temp.	Inlet-outlet	Weight	Packaging
	l/min	CPS	°C	BSPG	Kg	mm
028-P110-AB2	**110**	25000	65	3/4"	5,5	310X195X290
028-P170-AB2	**170**	35000	65	1"	15	430X260X450

AUTOMATIC AND MANUAL NOZZLE FOR AdBlue®

Manual/automatic nozzles for AdBlue® composed by plastic and stainless steel body, equipped with fixed and swiveling rubber holder. For their features they can be applied on every type of transfer system, also working for gravity.

Art. 099-5199-000 Manual plastic nozzle "AD90" for AdBlue®
Flow rate 90 l/min
Viton seals
Complete with hose-tail fitting
Swivel connection Ø 20

Art. 099-5200-000 Manual plastic nozzle stainless steel end "MP80" for AdBlue®
Flow rate 80 l/min
Viton seals
Plastic body with stainles steel end
Rubber holder Ø 20

Art. 099-5205-000 Automatic plastic nozzle stainless steel end"AP80" for AdBlue®
Flow rate 80 l/min
Viton seals
Plastic body with stainles steel end
Rubber holder Ø 20

Art. 099-5210-000 Automatic nozzle stainless steel "AD80" for AdBlue®
Flow rate 80 l/min
Viton seals
Stainless steel body
Swivel connection stainless steel Ø 20

Art. 099-5230-000 "Gravity kit" for AdBlue® transfer
Plastic nozzle with stainless steel end, flow rate 80 l/min, fitting d.20 "MP80"
Fitting for external connection for IBC S60x6
PVC spiral hose d.20x25 6 m lenght
Stainless steel clamps 20x32 mm

Art. 099-5250-000 Magnetic adaptor for AdBlue® tank

Ref.	Model	Fluid	Flow rate	Inlet-outlet	Weight	Ø End	Packaging
		type	l/min	BSPG	Kg	mm	mm
099-5199-000	AD90	AdBlue®	**90**	F 1" - 20	0,28	19,00	400X175X57
099-5200-000	MP80	AdBlue®	**80**	F 1" - 20	0,50	19,00	400X175X57
099-5205-000	AP80	AdBlue®	**80**	F 1" - 20	1,10	19,00	400X175X57
099-5210-000	AD80	AdBlue®	**80**	F 1" - 20	2,6	19,00	400X175X57
099-5230-000	Graviti kit	AdBlue®	**80**	F 1" - 20	4,5	19,00	410X400X320
099-5250-000	-	AdBlue®	**-**	Ø21x Ø39	0,10	-	100X100X50

Automatic dispensing nozzle for AdBlue® with Atex certificate. It is made of a stainless steel body and equipped with swiveling rubber holder with integrated flow regulator and adaptor EW22 to transfer into drums. It is suitable for the refueling of light vehicles < 3,5 t.

Art. 099-5220-000 ZVA Automatic nozzle for AdBlue ® LV / Urea according to ISO 22241 (DEF/AUS/ARLA 32) for light vehicles < 3,5 t.

Nozzle with ATEX certificate (EX II 1G) Certificate Nr. SIRA 03ATEX9 487U
Swivelling joint with integrated and certified flow regulator:
TÜV - P-TÜ7-8113338228 ISO 2224
AdBlue spout of Ø19 mm with integrated filter ISO 22241-5
Nozzle with automatic shut-off, check valve, 1-speed lever latch with removable latch pin EB 280
With block magnet for reed switch contact-less on/off switching in the nozzle boot.
Complete with adaptor EW 22
Maximum flow rate 10 l/min, recommended flow rate for service stations 5 l/min
Viton seals
Stainless steel body
Stainless steel swivelling joint 1" BSP male

Depending on the vehicle model the filler inlet is normally located next to the Diesel filler inlet, or may be in the boot/trunk or the engine bay. Please follow your vehicle manufacturer's AdBlue® refilling instructions.
Handling of the nozzle is similar to conventional ZVA nozzles. In order to dispense the nozzle must be pushed fully onto the filling point of the AdBlue® tank. Dispensing is done by pulling the lever. When the tank is full, the nozzle will shut off automatically.

Most light vehicles <3,5 t allow a trouble-free filling of the AdBlue® tanks with a flow rate of not more than 5 l/min. The nozzle should be adjusted to this value for daily operation.

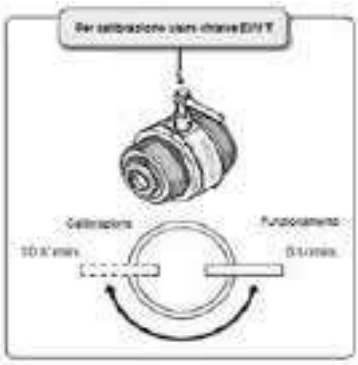

Ref.	Flow rate	Pressure	Accuracy	Inlet	Weight	Packaging
	l/min	bar	%	BSPG	kg	mm
099-5220-000	**5-10**	3,5	+/- 0,5	M 1"	1,20	400x175x57

DIGITAL FLOW METERS AND FILTERS FOR AdBlue®

Turbine flow meter that features high precision performance for the measurement of AdBlue® for private use. The software enables full control of dispensing system thanks to the various functions featured. Applicable on motor pumps or for gravity. AdBlue® delivery filter complete with 20 µ cartridge and key. The filter headboard comes with a button for air discharge.

Art. 099-5124-000 Digital turbine flow meter for AdBlue® MEC 24
Min-max flow rate 5-120 l/min
6 digits totalizer (non-resettable)
6 digits partial (resettable)
Allowed fluids: AdBlue®, anti-freeze, windscreen

Art. 099-5170-040 Electronic pulsed flow meter for AdBlue® MGI-40
PVC body
Min-max flow rate 4-40 l/min
Inlet-outlet connection F1”

Art. 099-5240-020 AdBlue® transparent delivery filter
Flow rate 60 l/min
Inlet-outlet connection F1”
Filtering capacity **20 µ**
Complete with key

Art. 099-5241-020 Cartridge for AdBlue® polypropylene filter
For filter 60 l/min
Filtering capacity **20 µ**

Ref.	Flow rate	Pressure	Accurancy	Inlet-outlet	Weight	Packaging
	l/min	bar	%	BSPG	Kg	mm
099-5124-000	**5-120**	10	+/- 1	F 1" - F 1"	0,35	100X100X60
099-5170-040	**4-40**	10	+/- 0,8	F 1" - F 1"	1,00	159X100X141

Ref.	filter capacity	Fluid	Flow rate	Inlet-outlet	Weight	Packaging
	µ	Type	l/min	BSPG	Kg	mm
099-5240-020	**20**	AdBlue®	60	F 1" - F 1"	1,00	150X245X165
099-5241-020	**20**	AdBlue®	-	-	0,06	Ø60Xh.126mm

Electronic control unit that offers high precision performance for the AdBlue® measurement and delivery for private use.

Art. 092-5200-230 Electronic control unit MecGest 110/230V 50Hz
Software included
preselection and multi-users consumption management

Art. 092-5220-000 Codified communication kit USB key reader for PC

Art. 092-5300-000 Red Key- Manager - nr. 1 pc.

Art. 092-5300-001 Blue key - User - nr. 1 pc.

Art. 092-5300-010 Kit blue keys - Users - 10 pcs

Art. 092-5350-001 Codified Kit Lan Connection USB - RS485

Art. 092-5402-100 Shielded cable signal 2 poles 100 m lenght

Art. 099-6600-000 Adaptor for suction hose SEC connection

Art. 099-6010-000 External suction hose connections for IBC S60X6

Art. 099-6020-006 Plastic foot valve with filter F 1”
Flow rate 80 l/min

Art. R1-9100-2006 Plastic fitting linear M 1” BSP - Ø 20

Art. R1-9100-2506 Plastic fitting linear M 1” BSP - Ø 25

Art. R1-9102-2006 Plastic fitting male 90° M 3/4” BSP - Ø 20

Art. R1-9105-2006 Plasting fitting female F 1” BSP - Ø 20

Art. R1-9106-2006 Plastic fitting 90° female F 1” BSP - Ø 20

Art. R1-9107-0606 Plastic fitting 90° F-F 1” BSP

Art. R1-9125-2006 Plastic fitting 90° male-female M/F 1” BSP
with rubber holder Ø 20

Art. R1-9120-0606 Plastic fitting 90° male-female M/F 1” BSP

SUCTION HOSES FOR AdBlue®

Art. 099-6500-000 Suction hose M 56x4 SEC connection
For IBC tanks and Mauser, Greif barrels
1050 mm Lenght max

Art. 099-6500-010 Suction hose 2” BSP SEC connection
For IBC tanks and Mauser, Greif barrels
1050 mm Lenght max

Art. 099-6504-000 Drum adaptor AF2 56x4 1” BSP
for Greif barrels

Art. 099-6504-010 Drum adaptor AF2 70x6 1” BSP
for Mauser barrels

Art. 099-6505-000 Drum adaptor F 2” BSP - M 70x6
for Mauser barrels

Art. 099-6506-000 Drum adaptor F 2” BSP - M 56x4
for Greif barrels

Art. 099-6510-011 Suction kit PVC spiral hose 1,10 m lenght with SEC connection
PVC spiral hose Ø 20x25
Inlet-outletM 1” BSP
SEC valve connection

Art. 099-6512-015 Suction kit PVC spiral hose 1,50 m lenght
PVC spiral hose Ø 20x25
Inlet-outlet M 1” BSP
Plastic foot valve+filter
Stainless steel clamps

Art. B27-1120-032 Stainless steel hose clamp 20x32 mm

Art. 909-0500-000 Antistatic rubber hose EPDM 20 bar 19x29

Ref.	Hose lenght	Ø Hose	Dimensions	Weight	Packaging
	m	G	mm	Kg	mm
909-0500-020	2	3/4"	19x29	1,5	400X400X100
909-0500-040	4	3/4"	19x29	2,5	400X400X100
909-0500-060	6	3/4"	19x29	3,4	400X400X100
909-0500-100	10	3/4"	19x29	5,3	400X400X150

MANUAL PUMPS FOR AdBlue® TRANSFER

They are suitable for the AdBlue® transfer. They can be easily installed and removed from drums.

Art. 099-5620-000 Polypropylene rotary pump for AdBlue®

delivery capacity: 20 l/min (5 l revolution)
For 50/220 l barrels
Plastic drum adaptor 2”
Viton seals
Stainless steel hardware
Spout (external diameter 1”)
Suitable for anti-freeze, windscreen and AdBlue® transfer

Art. 027-1325-P00 Manual lever pump for AdBlue®

Delivery capacity: 0,25 l stroke
Telescopic shank for 50/220 l barrels
Plastic drum adaptor 2”
Made in polypropylene, viton seals
Suitable for anti-freeze, windscreen and AdBlue® transfer

Art. 099-3717-000 Hand lever pump for AdBlue®

Delivery capacity: 0,25 l stroke
Telescopic shank for 50/220 l barrels
Plastic drum adaptor 2” BSP -M 70x6
Plastic drum adaptor 2” BSP -M 56x4
Made in polypropylene, viton seals
Suitable for anti-freeze, windscreen and AdBlue® transfer

Art. 099-3718-000 Hand lever pump for AdBlue®

Delivery capacity: 0,25 l stroke
Telescopic shank for 50/220 l barrels
Plastic drum adaptor 2” BSP -M 70x6
Plastic drum adaptor 2” BSP -M 56x4
Made in polypropylene, viton seals
Equipped with hose retin Ø20 with plastic end Ø 20 3 m l
Suitable for anti-freeze, windscreen and AdBlue® transfer

Ref.	Fluid	Spout	Delivery capacity	Weight	Packaging
	type	BSP / mm	l/min	Kg	mm
099-5620-000	AdBlue®	1"	**20 (5 l Ciclo)**	1,93	160X340X140
099-3717-000	AdBlue®	3/4"	**0,25 pompata**	1,45	510X240X110
099-3718-000	AdBlue®	20	**0,25 pompata**	2,70	510X240X110
027-1325-P00	AdBlue®	20	**0,30 pompata**	1,00	90X150X367

Our automatic hose reels with spring, fixed or swivelling, of varnished steel, stainless steel AISI 304 or motorized hydraulic, pneumatic and electric are suitable for flexible hoses for the delivery of compressed air, water, oil or similar, grease, diesel, antifreeze, windscreen and AdBlue®.

They allow to unroll only the necessary hose length, improving their functionality.

The rewinding of the hose is fast and safe and allows to have a tidy workplace.

You always have a ready-to-use equipment that grant to all the staff to work safely.

Please consult the lubrication equipment catalogue

You can download it from the website “www.meclube.com”

FIXED VARNISHED HOSE REELS FOR AdBlue® 20 bar

The automatic hose reels with springs in varnished steel are suitable to hold flexible hoses for the AdBlue® delivery. They allow to untwist quickly only the necessary lenght, improving the working and functionality.

Composed by:

Antistatic black rubber hose EPDM 20 bar
Stainless steel connections AISI 316
Stainless steel swiveling joint 90° AISI 316
Viton seals

F-400

Ref.	Hose lenght	Ø hose	Inlet-outlet
	m	G	
070-1209-400	**without hose**	-	M 1/2"G - M 1/2"G
070-1209-410	**10**	1/2"	M 1/2"G - M 1/2"G

F-460

Ref.	Hose lenght	Ø hose	Inlet-outlet
	m	G	
070-1309-400	**without hose**	-	M 1/2"G - M 1/2"G
070-1309-415	**15**	1/2"	M 1/2"G - M 1/2"G

F-550

Ref.	Hose lenght	Ø hose	Inlet-outlet
	m	G	
070-1409-500	**without hose**	-	F 3/4"G - M 3/4"G
070-1409-510	**10**	3/4"	F 3/4"G - M 3/4"G
070-1409-515	**15**	3/4"	F 3/4"G - M 3/4"G

The automatic hose reels with springs in varnished steel are suitable to hold flexible hoses for the AdBlue® delivery. They allow to untwist quickly only the necessary lenght, improving the working and functionality.

S-400

Ref.	Hose lenght	Ø hose	Inlet-outlet
	m	G	
071-1209-400	**without hose**	-	M 1/2"G - M 1/2"G
071-1209-410	**10**	1/2"	M 1/2"G - M 1/2"G

S-460

Ref.	Hose lenght	Ø hose	Inlet-outlet
	m	G	
071-1309-400	**without hose**	-	M 1/2"G - M 1/2"G
071-1309-415	**15**	1/2"	M 1/2"G - M 1/2"G

S-550

Ref.	Hose lenght	Ø hose	Inlet-outlet
	m	G	
071-1409-500	**without hose**	-	F 3/4"G - M 3/4"G
071-1409-510	**10**	3/4"	F 3/4"G - M 3/4"G
071-1409-515	**15**	3/4"	F 3/4"G - M 3/4"G

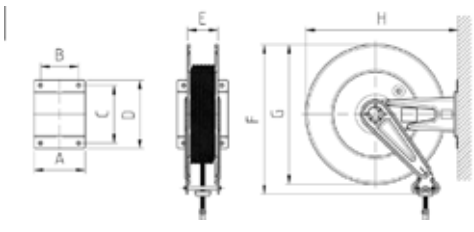

FIXED

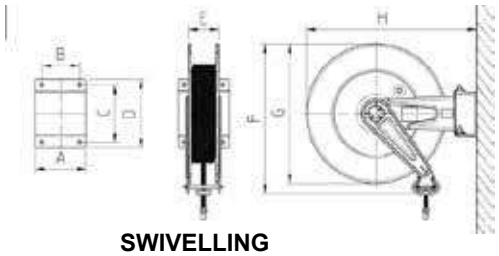

SWIVELLING

OVERALL DIMENSIONS

Mod.	A	B	C	D	E	F	G	H	Kg	Packaging (mm)
F-400	158	120	168	192	95	450	400	435	12,50<19,50	600X260X540
F-460	158	120	168	192	95	480	460	500	16,50<23,00	600X260X590
F-550	200	150	225	270	120	590	550	600	22,00<45,00	640X300X685
S-400	150	120	168	196	95	450	400	510	13,50<20,50	640X350X685
S-460	150	120	168	196	95	480	460	575	17,50<24,00	640X300X685
S-550	200	150	225	270	120	590	550	680	23,00<45,00	640X350X685

FIXED STAINLESS STEEL HOSE REELS FOR AdBlue® 20 bar

The automatic hose reels stainless steel AISI 304 with spring are suistable to hold flexible hose for flessibili AdBlue® delivery. They allow to untwist quickly only the necessary lenght, improving the working and the functionality.

Composed by:

Antistatic black rubber hose EPDM 20 bar
Stainless steel connections AISI 316
Stainless steel swiveling joint 90° AISI 316
Viton seals

FX-400

Ref.	Hose lenght	Ø hose	Inlet-outlet
	m	G	
070-2209-400	**without hose**	-	M 1/2"G - M 1/2"G
070-2209-410	**10**	1/2"	M 1/2"G - M 1/2"G

FX-460

Ref.	Hose lenght	Ø hose	Inlet-outlet
	m	G	
070-2309-400	**without hose**	-	M 1/2"G - M 1/2"G
070-2309-415	**15**	1/2"	M 1/2"G - M 1/2"G

FX-550

Ref.	Hose lenght	Ø hose	Inlet-outlet
	m	G	
070-2409-500	**without hose**	-	F 3/4"G - M 3/4"G
070-2409-510	**10**	3/4"	F 3/4"G - M 3/4"G
070-2409-515	**15**	3/4"	F 3/4"G - M 3/4"G

The automatic hose reels with springs in varnished steel are suitable to hold flexible hoses for the AdBlue® delivery. They allow to untwist quickly only the necessary lenght, improving the working and functionality.

SX-400

Ref.	Hose lenght	Ø hose	Inlet-outlet
	m	G	
071-2209-400	**without hose**	-	M 1/2"G - M 1/2"G
071-2209-410	**10**	1/2"	M 1/2"G - M 1/2"G

SX-460

Ref.	Hose lenght	Ø hose	Inlet-outlet
	m	G	
071-2309-400	**without hose**	-	M 1/2"G - M 1/2"G
071-2309-415	**15**	1/2"	M 1/2"G - M 1/2"G

SX-550

Ref.	Hose lenght	Ø hose	Inlet-outlet
	m	G	
071-2409-500	**without hose**	-	F 3/4"G - M 3/4"G
071-2409-510	**10**	3/4"	F 3/4"G - M 3/4"G
071-2409-515	**15**	3/4"	F 3/4"G - M 3/4"G

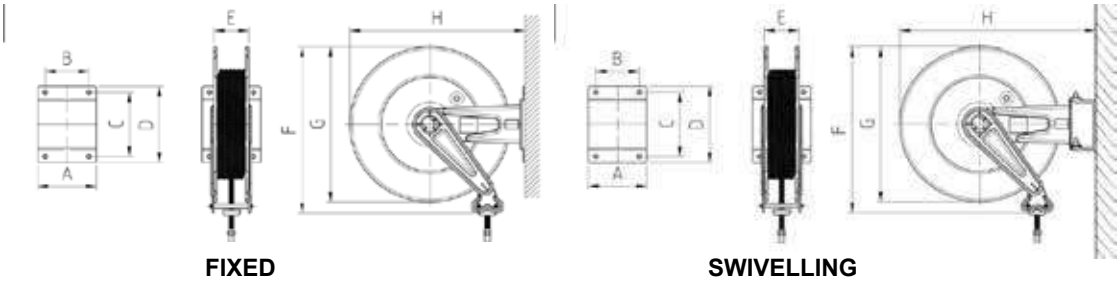

FIXED **SWIVELLING**

OVERALL DIMENSIONS

Mod.	A	B	C	D	E	F	G	H	Kg	Packaging (mm)
FX-400	158	120	168	192	95	450	400	435	12,50<19,50	600X260X540
FX-460	158	120	168	192	95	480	460	500	16,50<23,00	600X260X500
FX-550	200	150	225	270	120	590	550	600	22,00<45,00	640X300X685
SX-400	150	120	168	196	95	450	400	510	13,50<20,50	640X350X685
SX-460	150	120	168	196	95	480	460	575	17,50<24,00	640X350X685
SX-550	200	150	225	270	120	590	550	680	23,00<45,00	640X350X685

Digital turbine flow meter offers high precision performance for the measurement of private use liquid food-stuff (milk, oil, water...). The software enables full control of dispesing system thanks to the various functions featured. Applicable on motor pumps or for gravity.

Art. 100-5120-000 Digital turbine flow meter IN-LINE food min-max flow rate 10-150 l/min

6 digits totalizer (non resettable)
6 digits partial (resettable)
Allowed fluids: (milk, oil, water…)

Art. 100-5199-020 Manual plastic nozzle "F120" for food

Flow rate 120 l
PTFE seals
Plastic body
Swivel connection Ø 20

Art. 100-5199-025 Manual plastic nozzle "F120" for food

Flow rate120 l
PTFE seals
Plastic body
Swivel connection Ø 25

Ref.	Flow rate	Pressure	Accuracy	Inlet-outlet	Weight	Packaging
	l/min	bar	%	BSPG	Kg	mm
100-5120-000	**10-150**	10	+/- 0,5	F 1" - F 1"	0,35	145X135X85
100-5199-020	**120**	10	-	F 1" - 20	0,28	400X175X57
100-5199-025	**120**	10	-	F 1" - 25	0,28	400X175X57

Suitable to transfer chemical products. It is prearranged for the direct application on the drum.

Art. 100-3725-000 Stainless steel manual pump for AISI 316 for chemical products transfer

Delivery capacity: 0,125 l/stroke
With adaptor for drum connection
Shank 550 < 940 lenght for drums to 20 < 220 l
PTFE seals

Art. 030-1390-000 Trolley for plastic drums 20 < 30 l

EQUIPPED WITH:
nr. 2 wheels Ø 100 mm
Base dimension 215x275 mm

Ref.	Delivery capacity	for drums	Inlet-outlet	Weight	Packaging
	l/stroke	l	BSPG	Kg	mm
100-3725-000	**0,125**	20<220	F 1/2”	2,1	740X205X95
030-1390-000	**-**	20<30	-	3,7	550X270X120

Art. 095-5460-000 Kit suction hose diesel “Tank in Tank” l 1620 mm

Art. 099-6530-000 Kit suction hose AdBlue® “Tank in Tank”

Atex

II 2 G

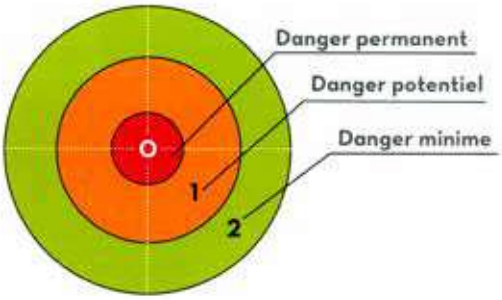

IT. La sicurezza negli ambienti esplosivi

La direttiva ATEX e divenuta un requisito obbligatorio in tutta la CEE dopa ii 1 ° Luglio 2003 per tutte le attre.zzature, elettriche e meccaniche, destinate ad essere utilizzate in una zona pericolosa. Atmosfere potenzialmente esplosive esistono dove c'e ii rischio di scoppio dovuto a miscele di gas/aria, vapore/aria, polvere/aria o altre combinazioni infiammabili, tipiche dei vapori di benzina. Qualora ii materiale elettrico o meccanico dovesse essere utilizzato in aree con atmosfera esplosiva deve essere progettato e costruito in modo da non creare/eliminare le fonti d'innesco quali scintille, superfici calde o elettricita statica, tutte fonti di combustione in grado di accendere queste miscele. Le zone di rischio per ambienti con presenza di gas e vapori infiammabili possono andare dalla ZONA O (il rischio di esplosione e continua), alla ZONA 1 (il rischio di scoppio e probabile), alla ZONA 2 (rischio improbabile e se si presenta una possibilita di deflagrazione, persiste solo per breve periodo).

EN. Safety in explosive environments

As of 1st July 2003, the ATEX directive came into force throughout the EEC. This directive became an obligatory requirement for all electrical and mechanical equipment intended for use in dangerous areas. Potentially explosive atmospheres exist where there is a risk of explosion due to mixtures of gas and air, steam and air, dust and air or other flammable combinations typical of petrol vapours. If the electrical or mechanical material must be used in areas where there is an explosive atmosphere, it must be designed and built so as not to create/ to eliminate sources of ignition such as sparks, hot surfaces or static electricity and all sources of combustion able to ignite these mixtures. Risk areas for environments where gas and flammable vapours are present can range from AREA 0 (constant risk of explosion) to AREA 1 (risk of explosion probable) and AREA 2 (low risk and any risk of explosion persists for a short time only).

Group	Category	Type of explosive atmosphere	perma-nent prefix	protection method		gas class	temperature class		equipment protection level
II	2	G	Ex	db	h	IIB	T4	T6	Gb
				Benz 50	Benz Flow		Benz 50	Benz Flow	

II = II gruppo II comprende gli apparecchi destinati a essere utilizzati in altri ambienti (diversi da miniere) in cui vi sono probabilita che si manifestino atmosfere esplosive
2 = Elevata protezione, Categoria 2 per ZONE 1 GAS e ZONE 2 GAS
G = Gas
Ex = Equipaggiamento a prova di esplosione certificate secondo le direttive Europee ATEX
d = custodie a prova di esplosione (EN 60079-1)
IIB = Apparecchiature elettriche per atmosfere potenzialmente esplosive diversi delle miniere. (etilene etc.)
T4 = La temperatura della superficie della pompa non superera i 135°C.

II = Group II comprises appliances intended for use in other environments (other than mining) in which explosive atmospheres are probable.
2 = High protection, Category 2 for AREA 1 GAS and AREA 2 GAS G = Gas
Ex = Explosion-proof equipment certified according to the European ATEX directives
d = explosion-proof cases (EN 60079-1)
118 = Electrical appliances for potentially explosive environments other than mining.(ethilene etc.)
T4 = The temperature of the pump will not exceed 135°C.

ADR REGULATION

European agreement concerning the internetional carriage of dangerous goods by road

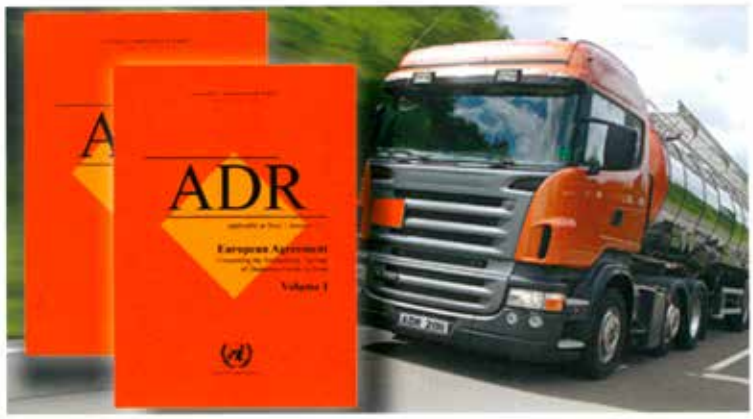

The carriage of dangerous goods by road is regulated by an international Agreement (ADR) which is regularly amended and updated every two years. The original agreement was called “The European Agreement concerning the International Carriage of Dangerous Goods by Road {AOR}’ and was signed at Geneva on 30 September 1957. Currently the number of countries which adhere to ADR is 48. The Agreement itself is short and simple. it consists of 17 articles which contain legislative principles and the procedures for Agreement subscription, application and revision, and of two Annexes that list all the instruction and provisions; Annex A contains the conditions for the goods in question, in particular as regards their packaging and labelling, and in Annex 8 are laid down the provision regarding the construction, equipment and operation of the vehicles carrying the dangerous goods.

In summary ADR regulations concern:
- Classification of dangerous goods with reference to transport by road.
- Dangerous Goods List; special provisions related to dan-

EXEMPTIONS:

Annex A, in addition to provisions concerning dangerous substances and articles, specifies the exemptions relative to the transport on road of dangerous goods; in accordance with these exemptions it is possible to carry ADR goods in compliance with the quantities listed in par. 1.1.3.6 without any UN-approved package, driver with training certificate or safety labeled and equipped vehicle.
In the matter in question these exemprions refer to:
- exemptions related to the nature of the transport operation;
- exemptions related to quantities carried per transport unit.

EXEMPTIONS RELATED TO THE NATURE OF THE TRANSPORT OPERATION (TOTAL EXEMPTION PAR.1.1.3.I ADR).

(a) The carriage of dangerous goods by private individuals where the goods in question are packaged for retail sale and are intended for their personal or domestic use or for their leisure or sporting activities provided that measures have been taken to prevent any leakage of con tents in normal conditions of carriage. When the se goods are flammable liquids carried in efil lable receptacles filled by, or for, a private individual, the total quantity shall not exceed 60 liters per receptacle and 240 liters per tran sport unit. Dangerous goods in IBCs, large packagings or tanks are not considered to be packaged for retail sale.

(c) The carriage undertaken by enterprises which is ancillary to their main activity, such as deliveries to gerous goods packed in limited quantities.
- Packaging and containers provisions.
- Construction and testing of packagings.
- Construction and approval of vehicles.
- Conditions of carriage, loading, unloading and handling.
- Vehicle crews, equipment, operation and documentation.
- Total and partial exemptions.

Dangerous goods are defined on the basis of their properties and are divided into Classes. The Classes of dangerous goods, according to ADR, are the following:
- Class 1 - Explosive substances and articles.
- Class 2 - Gases.
- Class 3 - Flammable liquids.
- Class 4.1- Flammable solids, self-reactive sub stances and solid desensitized explosives.
- Class 4.2 - Substances liable to spontaneous combustion.
- Class 4.3 - Substances which, in contact with water, emit flammable gases.
- Class 5.1 - Oxidizing substances

or returns from building or civil engineering sites, or in relation to surveying, repairs and maintenance, in quantities of not more than 450 liters per packaging and within the maximum quantities specified in par. 1.1.3.6. Measures shall be taken to prevent any leakage of contents in normal conditions of carriage. These exemptions do not apply to Class 7. Carriage undertaken by such enterprises for their supply or external or internal distribution does not fall within the scope of this exemption.

EXEMPTIONS RELATED TO QUANTITIES CARRIED PER TRANSPORT UNIT (PARTIAL EXEMPTION PAR. 1.1.3.6 ADR).

In accordance with this article, transport of dangerous goods can be partially exempt from ADR presciptions if the quantity carried does not exceed the value indicated in a specific table (I.l.3.6.3). Transports under par. 1.1.3.6 have the following exemptions to the regulations;

- vehicle need not have orange Plates displayed;
- no requirement to have instructions in writing;
- driver does not need ADR Vocational licence, but will need awareness training.

in particular, for petroleum products:

- for goods belonging to Packaging Group II (i.e. gasoline) the maximum quantity carried per tran sport unit is 333 l;
- for goods belonging to Packaging Group III (i.e. Diesel Fuel, kerosene) the maximum quantity car ried per transport unit is 1.000 L
- Class 5.2 - Organic peroxides.
- Class 6.1 - Toxic substances.
- Class 6.2 - infectious substances.
- Class 7 - Radioactive material.
- Class 8 - Corrosive substances.
- Class 9 - Miscellaneous dangerous substances and articles.

From a quantitative point of view, the dangerous goods more prevalent on the roads are the petroleum products (Class 3 - Flammable liquids), in particular the products with number: UN 1202 (Diesel fuel), UN 1203 (gasoline) and UNI223 (kerosene).

IN SUMMARY:
- Partial Exemption: in accordance with par. 1.1.3.6, the maximum quantities which can be carried per transport unit are:

	Max Quantity (L)	Container Type
Diesel fuel	1000	UN Approved - ADR Homologated for Dangerous Goods of Class 3 and Packaging Group III.
Gasoline	333	UN Approved - ADR Homologated for Dangerous Goods of Class 3 and Packaging Group II.

- Total Exemption- in accordance with par. 1.1.3.I, the maximum quantities which can be carried are:

- **par. 1.1.3.1 a), for private individuals:**

	Max Quantity (L)	Container Type
Diesel Fuel and Gasoline	240 l, with a maxof 60 l per unit.	Adequate for the purpose.

- **par. 1.1.3.1 c), for enterprises:**

	Max Quantity (L)	Tipo di contenitore
Diesel fuel	450	Adequate for the purpose.
Gasoline	333	Adequate for the purpose.

GENERAL SALES CONDITIONS

When ordering please use the part numbers indicated in the catalogue.

Claims will not be accepted if we receive them 8 (eight) days after the reception of the order.
After this period the goods will be considered tacitly accepted.

The goods travel at customer's risk, even if Meclube organizes DAP shipment.

Except previously agreed, all prices are to be intended EX WORKS Bondeno di Gonzaga (MN), Incoterms 2020.

In case of late payments for any reason, including missed reception of statements of account, the buyer has to pay to the seller the annual interest in force at the moment of the sale, in the amount indicated on the invoice.

Any change of faulty products can be made to MECLUBE according to DAP Incoterms, and after having received our authorization.

The company MECLUBE takes no responsibilities for missing goods or damaged parcels caused by the shipment.

For any controversy only the Court of Mantua will entertain jurisdiction.

Specifications, dimensions, features and colours reported in this catalogue are not binding, and due to continuous performance enhancements of equipment and accessories, can be modified without any notice.

EDITION 19/02/2022
Foto F.lli ZAMBRONI
MADE IN ITALY

MECLUBE srl
Strada Pavesa, 13 - Loc. Bondeno
46023- Gonzaga (MN) - ITALIA
Tel. +39 0376 595006 - +39 0376 595035
Fax +39 0376 54144
info@meclube.com

www.meclube.com

F.lli Zambroni Reggiolo-Luzzara